VALLEY SIGNATURE

OVO UNDERMOUNT BATHTUB

O V O 6 0 3 2 U M

With clean lines and a modern design, the Ovo bathtub will add character to any bathroom.

DESCRIPTION:

- Modern Style
- End Drain
- Undermount bathtub
- High gloss / Crack-resistant acrylic
- Made in Canada
- Complies with CSA & IAPMO standards

MEASUREMENTS:

- **Length:** 57.5" / 1461mm
- **Width:** 30.5" / 775mm
- **Height:** 20" / 508mm

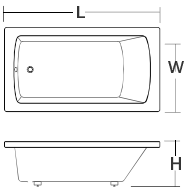

WATER DEPTH	CAPACITY
13.5" / 343mm Drain to overflow	46 gal. 174 litres of water

AVAILABLE COLOURS:

White -WHT- | Biscuit -BIS- | Black -BLK-

CONFIGURATIONS:

- Texture Bottom
- Integral armrest

SHIPPING INFORMATION

- **Length:** 62" / 1575mm
- **Width:** 34" / 864mm
- **Height:** 24" / 610mm
- **Net Weight:** 29 kg / 64 lbs
- **Gross Weight:** 35.8 kg / 79 lbs

TUB WARRANTY:

Valley Acrylic's Undermount bathtubs have a limited warranty for residential use for a period of **20 years** from the original purchase date, against any failure from improper manufacturing defects.

c LC us

Complies With :
CSA B24S1 (2004)
CSA B45.5 (2002)
ANSI Z124.1.2 (2005)

::kitchensource.com
1.800.667.8721

VALLEY SIGNATURE

OVO UNDERMOUNT BATHTUB

O V O 6 0 3 2 U M

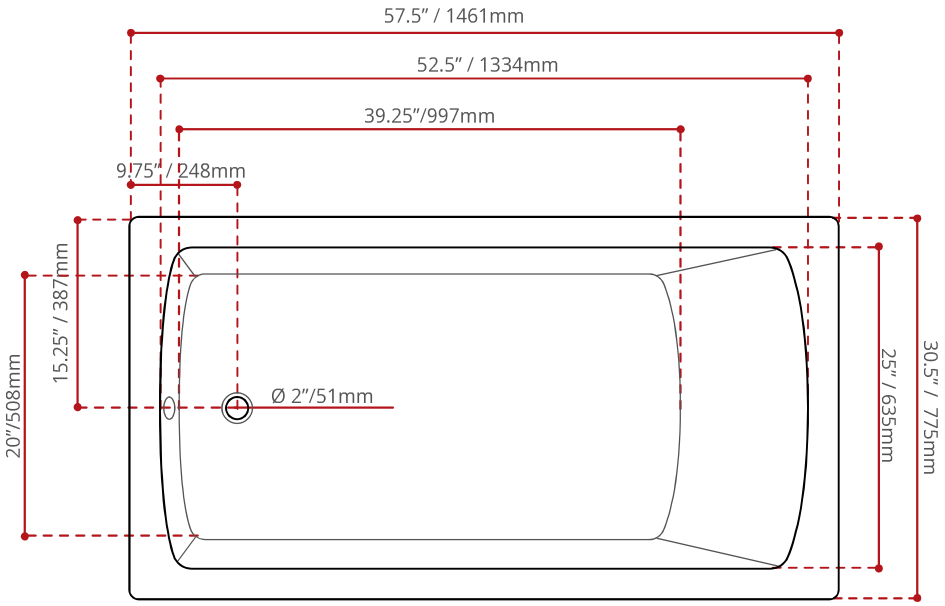

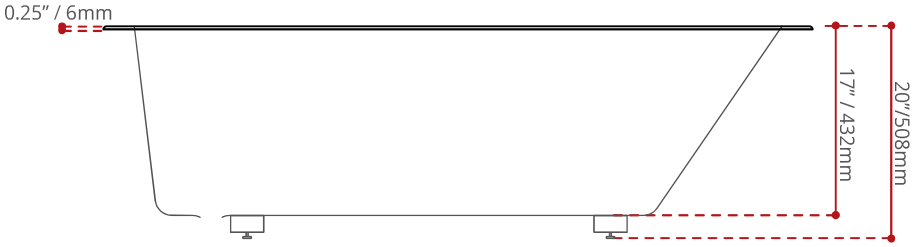

PUMP LOCATION OPTIONS:

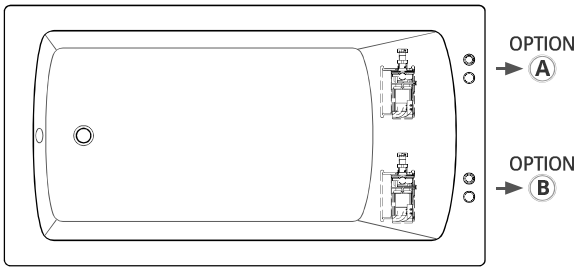

JETTING OPTIONS:

- Lateral Air jets
- Air illusion jets
- Santé Air
- Square zen jets
- Neck-Jet massage system
- Whirlpool jets
- V-Masseuse
- Chromatherapy
- Aromatherapy
- Comfort Warm

REQUIRED JETTING ELECTRICAL INFORMATION:

Blower:
- 120 V
- 60 Hz
- 12 amp.

Pump:
- 110 V
- 60 Hz
- 15 amp.

In-Line Heater:
- 110 V
- 60 Hz
- 15 amp.

DISCLAIMER:

Measurements may vary ± ¼"
(Diagram Not to scale)

c LC us

Complies With :
CSA B24S1 (2004)
CSA B45.5 (2002)
ANSI Z124.1.2 (2005)

kitchensource.com
1.800.667.8721