Streamline

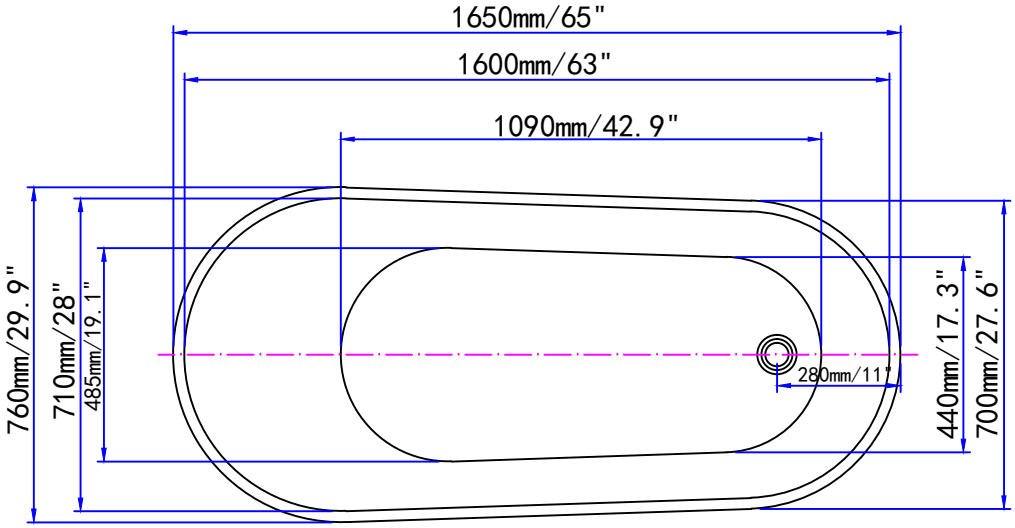

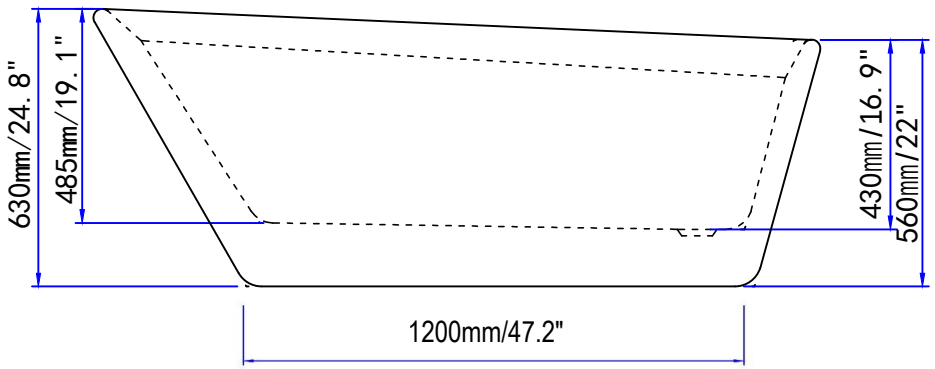

N-1521-65FSWH-FM

kitchensource.com
1.800.667.8721