Streamline

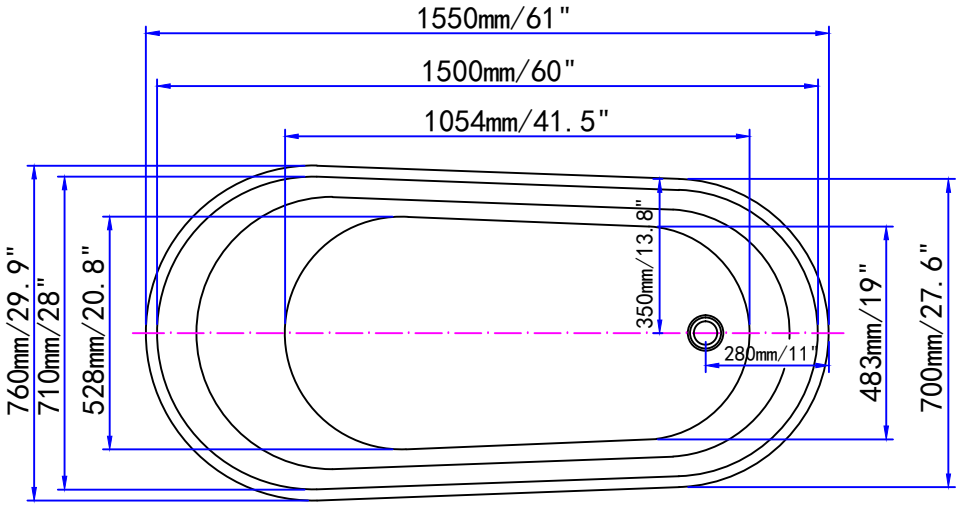


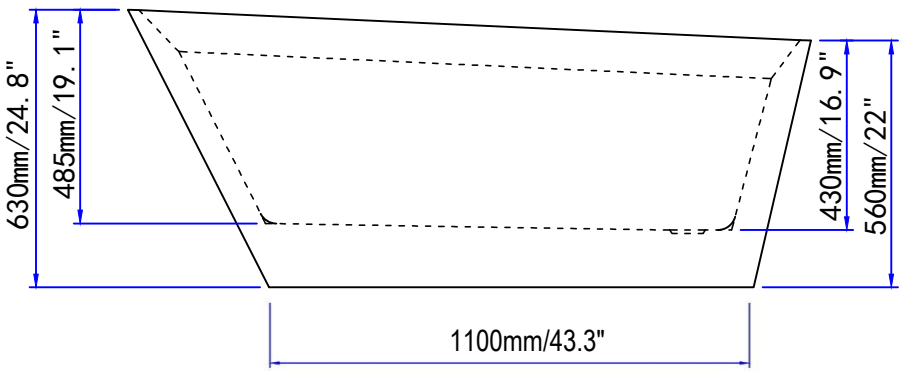


N-1520-61FSWH-FM

kitchensource.com
1.800.667.8721