AM152ETL-5

5 ft Clear Rectangular Acrylic Whirlpool Bathtub

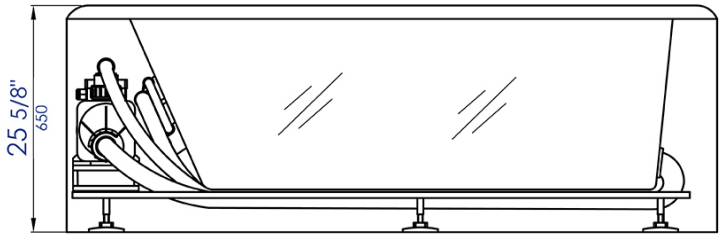

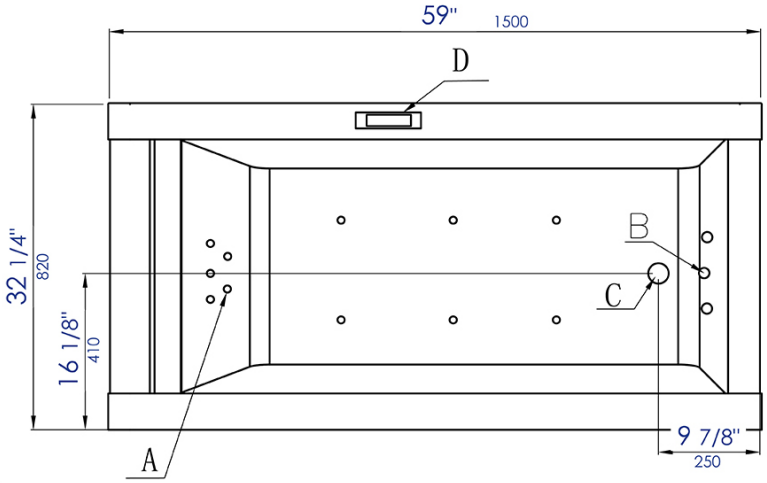

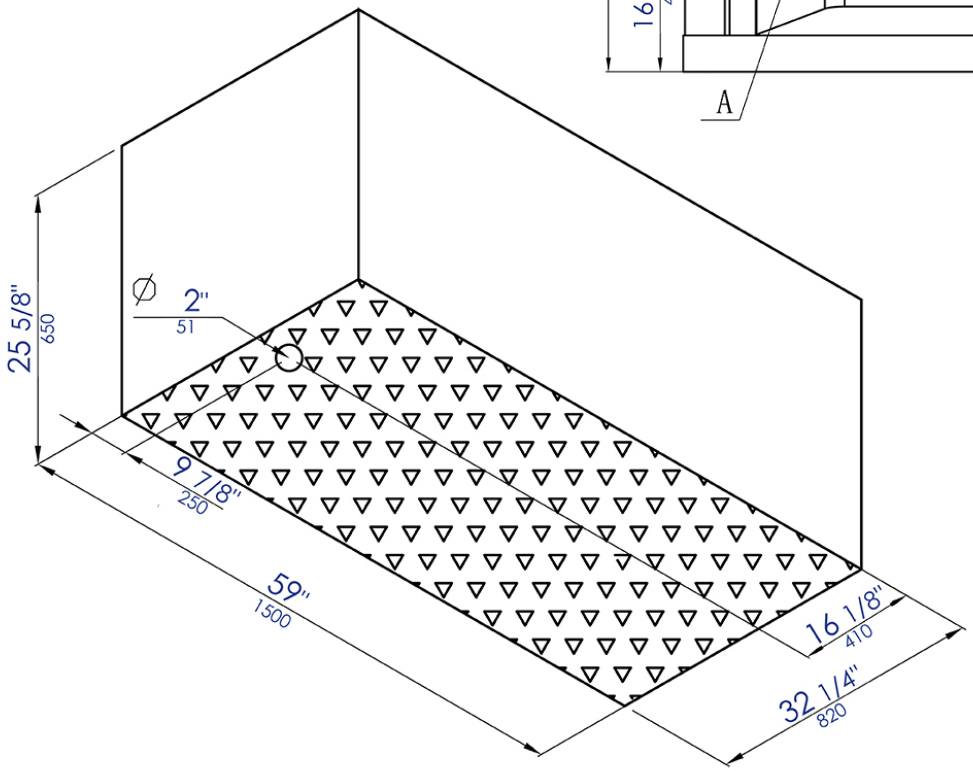

A、Jet B、Light C、Drain D、Control panel

kitchensource.com
1.800.667.8721

2017 EAGO USA All Rights Reserved. This material may not be reproduced, displayed, modified or distributed without the express prior written permission of the copyright holder.