88 5061 761
The Orleans Storage Stand

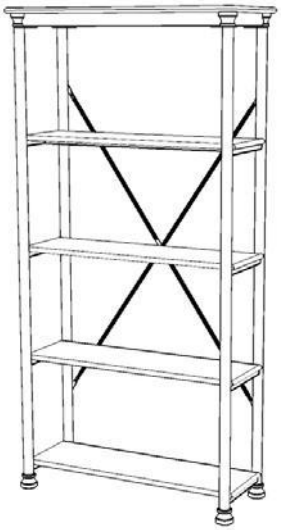

IMPORTANT NOTE

Carefully remove all the parts from the carton and put them individually on a soft cloth to prevent scratches or other damages occuring to the parts.

We have taken great care in the design of this product and request that you carefully and strictly follow our assembly instructions to ensure a completed product as it was designed.

Home Styles

Part List (in this carton)

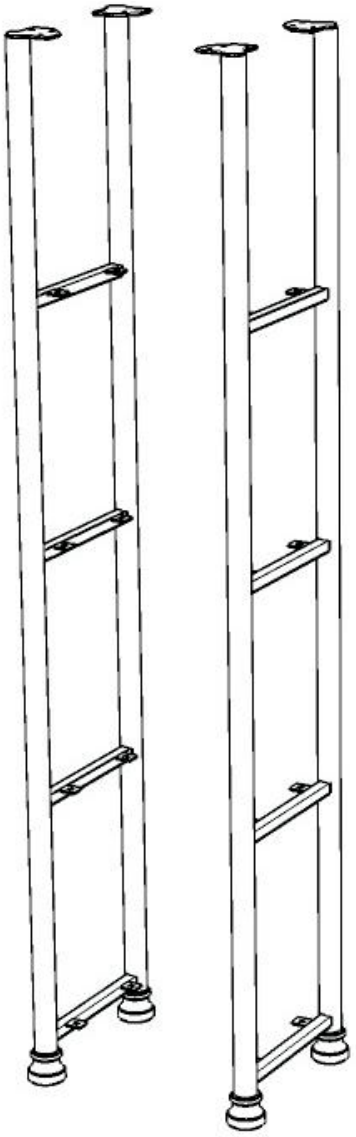

B.
Side Frame
1 pc.

C.
Side Frame
1 pc.

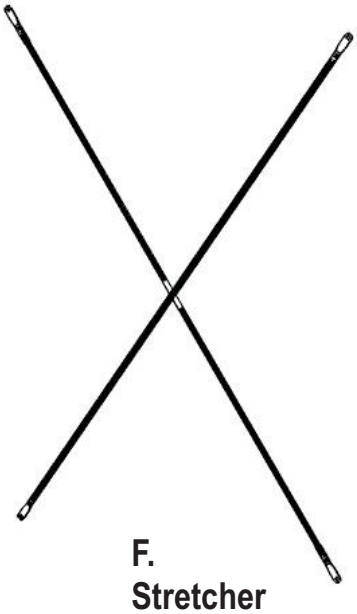

F.
Stretcher
1 pc.

For assembly see instructions in carton 88 5061 762

Tools required for assembly : ***Phillips*** screwdriver

Tools recommended for assembly : Level

kitchensource.com
1.800.667.8721

88 5061 762
The Orleans Storage Stand

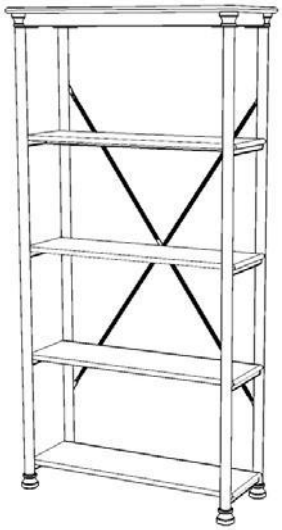

IMPORTANT NOTE

Carefully remove all the parts from the carton and put them individually on a soft cloth to prevent scratches or other damages occuring to the parts.

We have taken great care in the design of this product and request that you carefully and strictly follow our assembly instructions to ensure a completed product as it was designed.

Home Styles

Part List (in this carton)

A.
Top
1 pc.

D.
Shelf
4 pcs.

E.
Support
4 pcs.

Hardware List

Hex Wrench
1 pc.

Small
Hex Wrench
1 pc.

Spring Washer
20 pcs. (+1 extra)

Head Cap Bolt
20 pcs. (+1 extra)

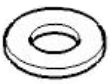

Flat Washer
20 pcs. (+1 extra)

Wood Screw
12 pcs. (+1 extra)

Head Cap Bolt
(short)
12 pcs. (+1 extra)

Also need the Parts in carton 88 5061 761

Tools required for assembly : ***Phillips*** screwdriver

Tools recommended for assembly : Level

kitchensource.com
1.800.667.8721

IMPORTANT

**** Do not tighten up all the screws until each part is properly assembled.***

**** You should keep Hex Wrench in a safe place as you may need to tighten up the Head Cap Bolts in the future.***

**** After assembly, item must be level to work properly. Use the included adjustable levelers to level.***

STEP 1

Place Top (A) upside down on a soft cloth.

Attach Side Frame (B), (C) onto Top (A) with Head Cap Bolts (short). (See figure 1)

Attach Stretcher (F) to unit with Flat Washers, Spring Washers and Head Cap Bolts. (See figure 2)

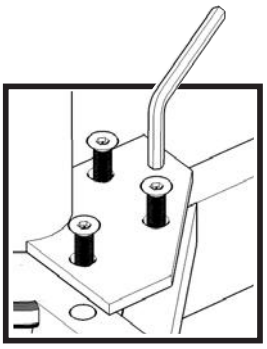

Figure 1

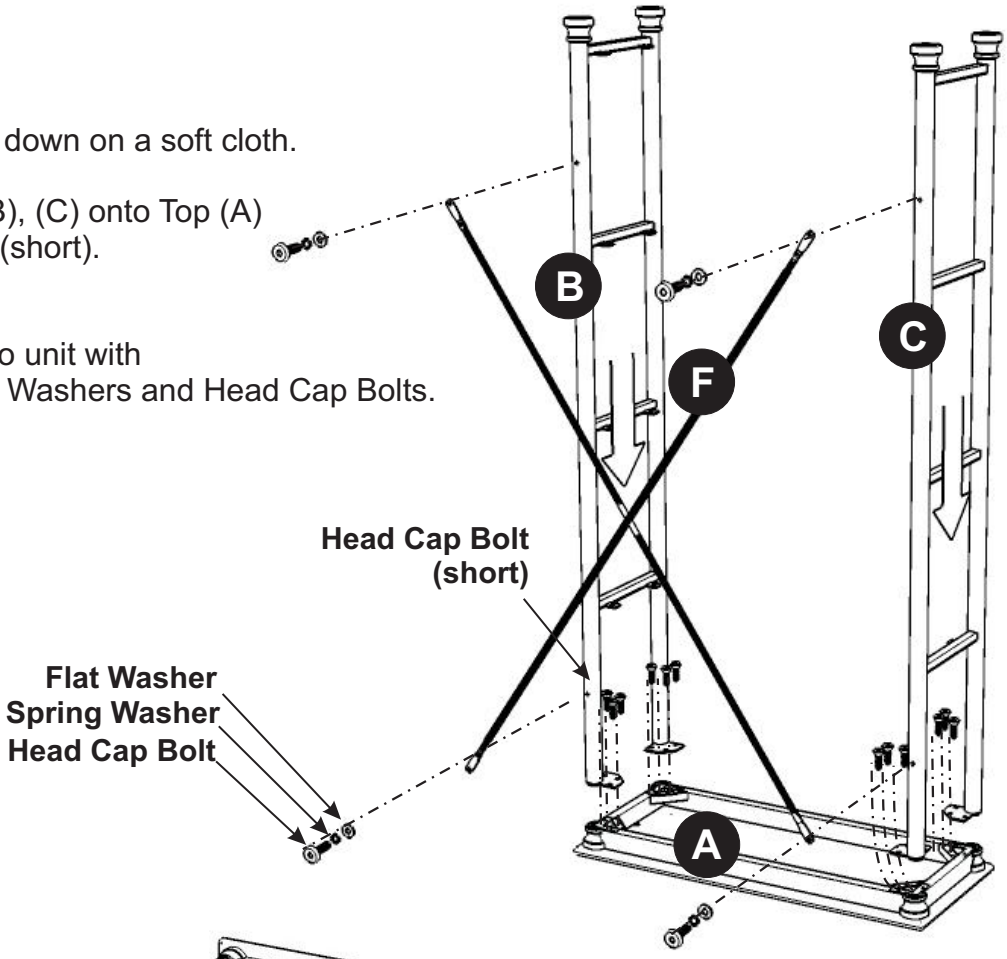

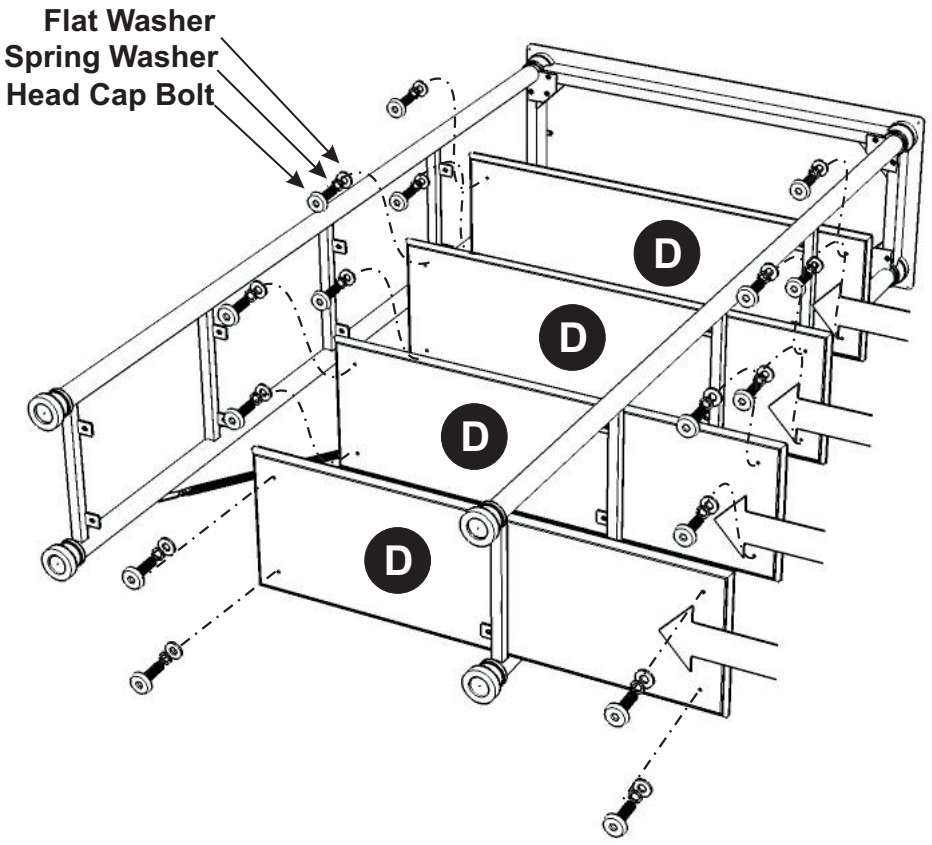

STEP 2

Attach Shelves (D) to unit with Flat Washers, Spring Washers and Head Cap Bolts.

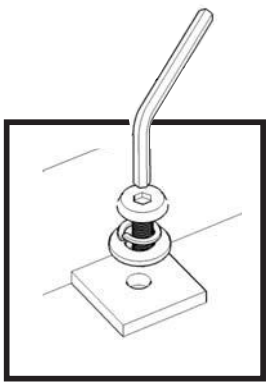

Figure 2

kitchensource.com
1.800.667.8721

STEP 3

Attach Supports (E)
to unit with Wood Screws.

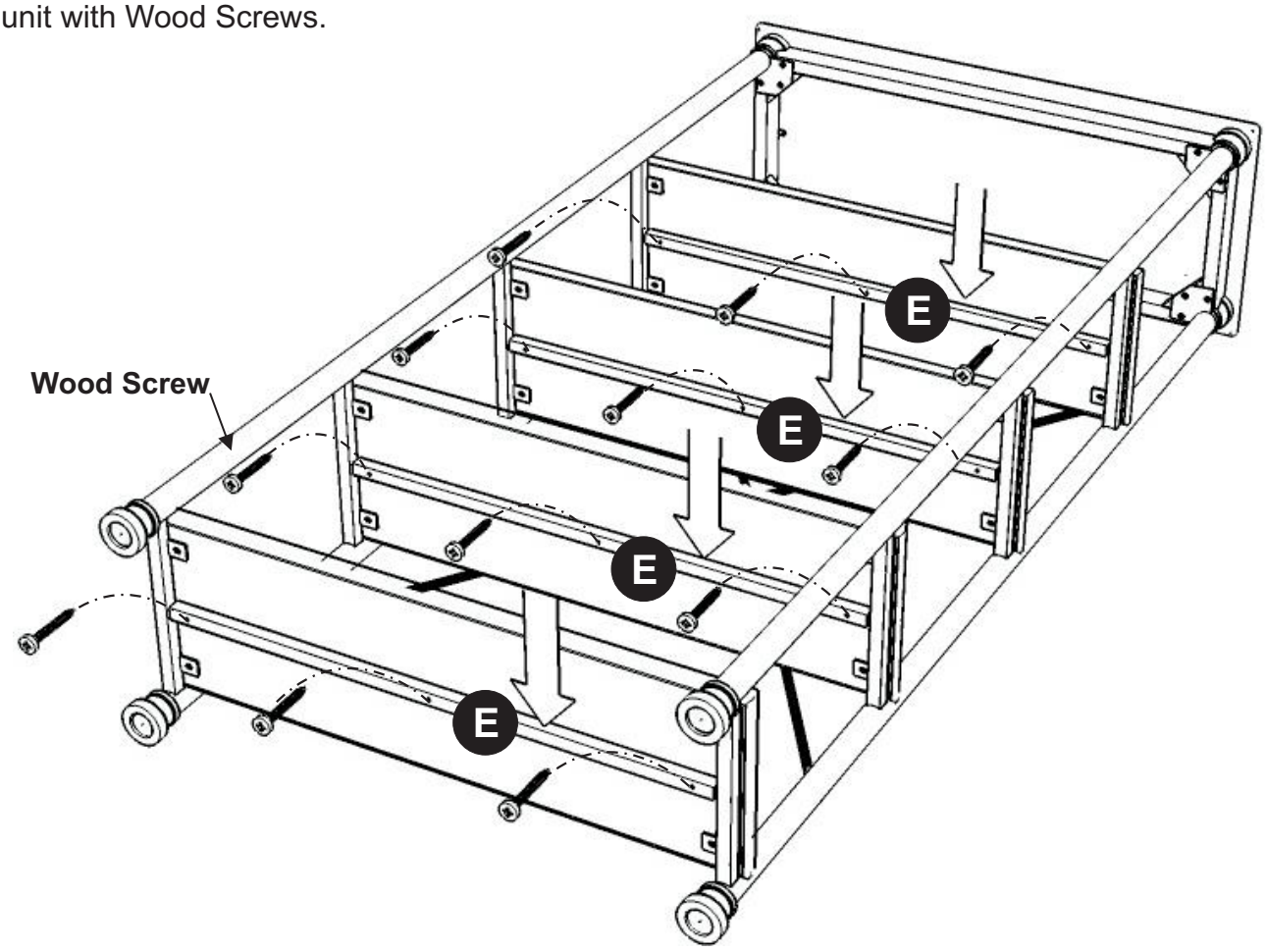

STEP 4

Turn the unit over to its' upright position.

To level the unit, adjust the adjustable levelers on the bottom of unit. (see Figure 3)

Note: Unit must be level to work properly.

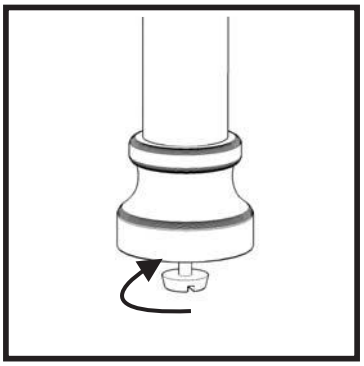

(Figure 3)

kitchensource.com
1.800.667.8721