::kitchensource.com
☎ 1.800.667.8721

INSTALLATION INSTRUCTIONS

BROAN® *Elite*

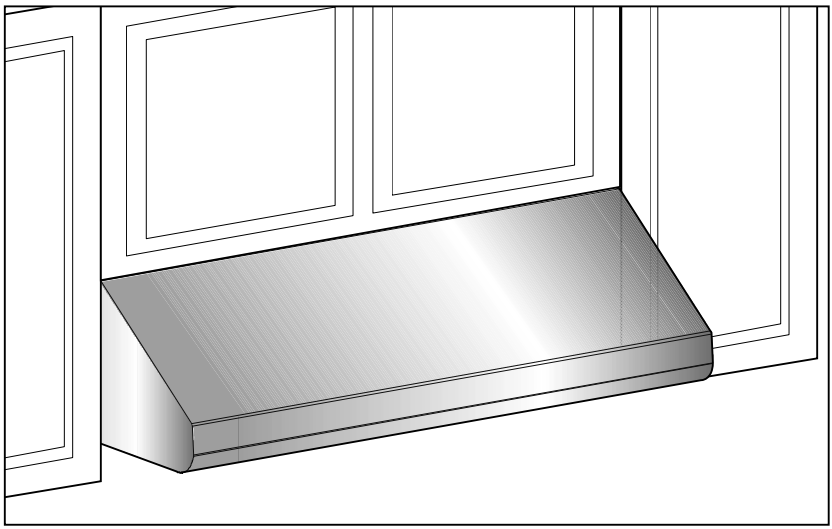

E64000 SERIES

⚠ INTENDED FOR DOMESTIC COOKING ONLY ⚠

READ AND SAVE THESE INSTRUCTIONS

INSTALLER: LEAVE THIS MANUAL WITH HOMEOWNER.
HOMEOWNER: USE AND CARE INFORMATION ON PAGES 13 & 14.

⚠WARNING

TO REDUCE THE RISK OF FIRE, ELECTRIC SHOCK OR INJURY TO PERSONS, OBSERVE THE FOLLOWING:

1. Use this unit only in the manner intended by the manufacturer. If you have questions, contact the manufacturer at the address or telephone number listed in the warranty.
2. Before servicing or cleaning unit, switch power off at service panel and lock service disconnecting means to prevent power from being switched on accidentally. When the service disconnecting means cannot be locked, securely fasten a prominent warning device, such as a tag, to the service panel.
3. Installation work and electrical wiring must be done by qualified personnel in accordance with all applicable codes and standards, including fire-rated construction codes and standards.
4. Sufficient air is needed for proper combustion and exhausting of gases through the flue (chimney) of fuel burning equipment to prevent backdrafting. Follow the heating equipment manufacturer's guidelines and safety standards such as those published by the National Fire Protection Association (NFPA) and the American Society for Heating, Refrigeration and Air Conditioning Engineers (ASHRAE) and the local code authorities.
5. When cutting or drilling into wall or ceiling, do not damage electrical wiring and other hidden utilities.
6. Ducted fans must always be vented to the outdoors.
7. Do not use this unit with any additional solid-state speed control device.
8. To reduce the risk of fire, use only metal ductwork.
9. This unit must be grounded.
10. When applicable local regulations comprise more restrictive installation and/or certification requirements, the aforementioned requirements prevail on those of this document and the installer agrees to conform to these at his own expenses.

TO REDUCE THE RISK OF A RANGE TOP GREASE FIRE:

a) Never leave surface units unattended at high settings. Boilovers cause smoking and greasy spillovers that may ignite. Heat oils slowly on low or medium settings.

b) Always turn hood ON when cooking at high heat or when flambeing food (i.e.: Crêpes Suzette, Cherries Jubilee, Peppercorn Beef Flambé).

c) Clean ventilating fans frequently. Grease should not be allowed to accumulate on fan, filters or in exhaust ducts.

d) Use proper pan size. Always use cookware appropriate for the size of the surface element.

⚠WARNING

TO REDUCE THE RISK OF INJURY TO PERSONS IN THE EVENT OF A RANGE TOP GREASE FIRE, OBSERVE THE FOLLOWING*:

1. SMOTHER FLAMES with a close-fitting lid, cookie sheet or metal tray, then turn off the burner. BE CAREFUL TO PREVENT BURNS. IF THE FLAMES DO NOT GO OUT IMMEDIATELY, EVACUATE AND CALL THE FIRE DEPARTMENT.
2. NEVER PICK UP A FLAMING PAN — You may be burned.
3. DO NOT USE WATER, including wet dishcloths or towels — This could cause a violent steam explosion.
4. Use an extinguisher ONLY if:
   - **A.** You own a Class ABC extinguisher and you know how to operate it.
   - **B.** The fire is small and contained in the area where it started.
   - **C.** The fire department has been called.
   - **D.** You can fight the fire with your back to an exit.

* Based on "Kitchen Fire Safety Tips" published by NFPA.

CAUTION

1. For indoor use only.
2. For general ventilating use only. Do not use to exhaust hazardous or explosive materials and vapors.
3. To avoid motor bearing damage and noisy and/or unbalanced impellers, keep drywall spray, construction dust, etc. off power unit.
4. Your hood motor has a thermal overload which will automatically shut off the motor if it becomes overheated. The motor will restart when it will be cooled down. If the motor continues to shut off and restart, have the hood serviced.
5. For best capture of cooking impurities, the bottom of the hood should be at a minimum of 24" and at a maximum of 30" above the cooking surface.
6. Two installers are recommended because of the large size and weight of this hood.
7. To reduce the risk of fire and to properly exhaust air, be sure to duct air outside — Do not exhaust air into spaces within walls or ceiling or into attics, crawl space or garage.
8. This product is equipped with a thermostat which may start blower automatically. To reduce the risk of injury and to prevent power from being switched on accidentally, switch power off at service panel and lock or tag service panel.
9. Because of the high exhausting capacity of this hood, you should make sure enough air is entering the house to replace exhausted air. Use an appropriate make-up air device or open a window close to or in the kitchen.
10. To reduce the risk of fire and electric shock, the Broan Elite E64E Series hood must be installed with one Broan exterior blower model 331H, 332H, 335 or 336; or one Broan in-line blower model HLB3, HLB6, HLB9 ou HLB11. Other blowers cannot be substituted. (Exterior or in-line blowers sold separately.)
11. Please read specification label on product for further information and requirements.
12. When used in recirculation mode, to reduce the risk of fire and shock, use only conversion kit model ANKE60.

- E64000 SERIES RANGE HOOD SYSTEM -
INTERNAL BLOWERS

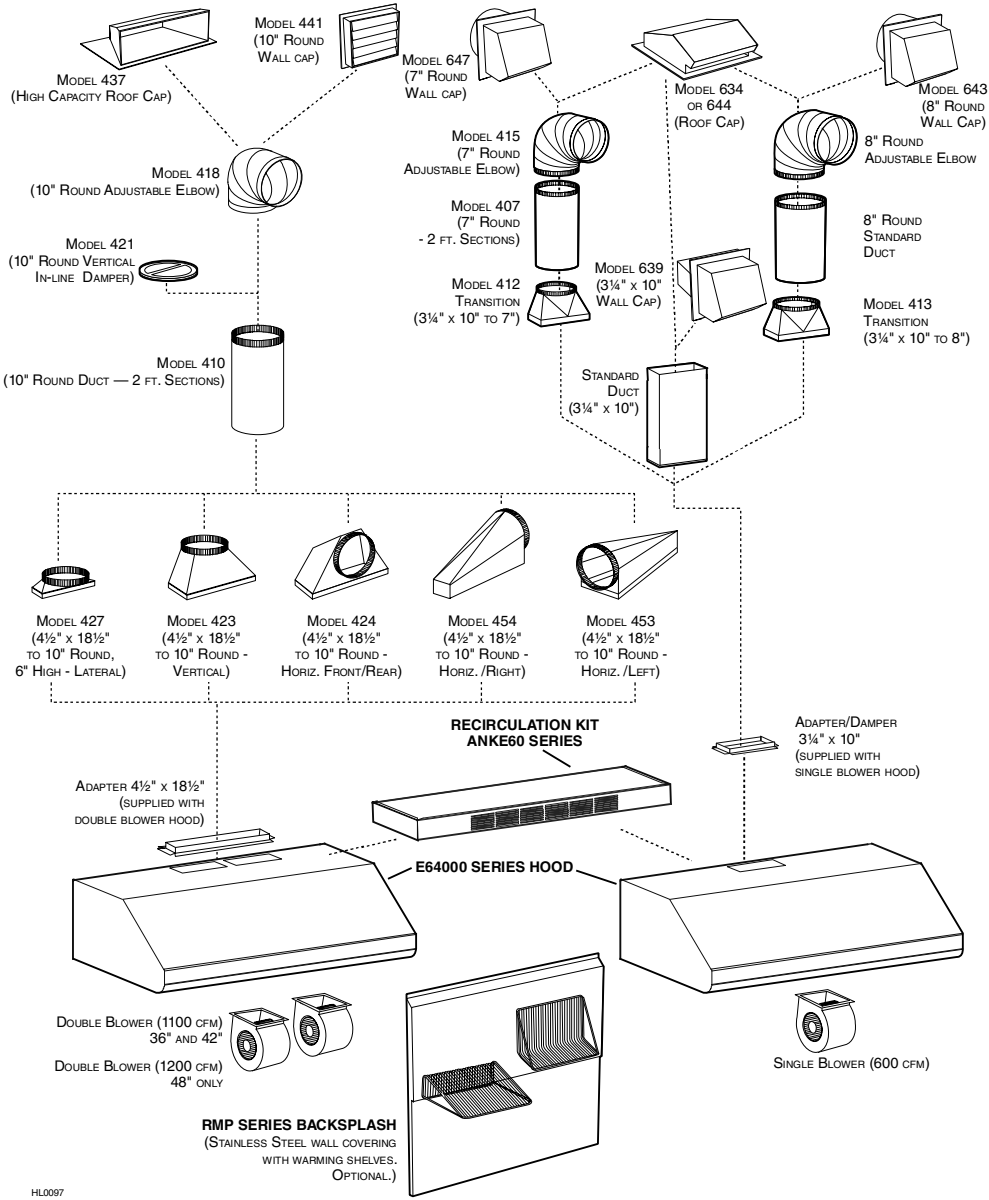

HL0097

- E64000 SERIES RANGE HOOD SYSTEM -
IN-LINE AND EXTERIOR BLOWERS

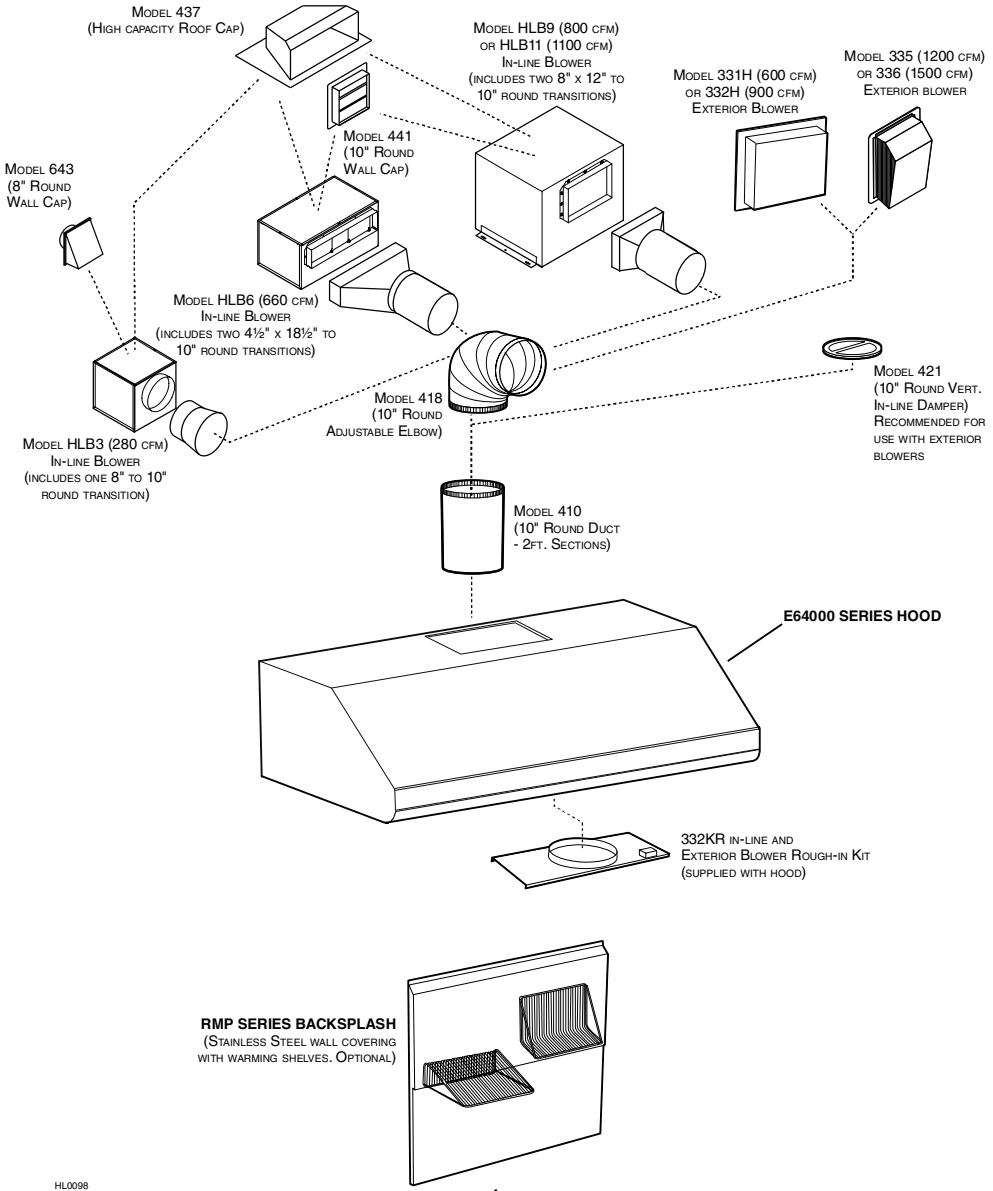

RMP SERIES BACKSPLASH
(Stainless Steel wall covering
with warming shelves. Optional)

HL0098

1. SELECT BLOWER OPTION AND INSTALLATION TYPE

1.1 Non-Ducted Installation

For a non-ducted installation, a non-duct kit ANKE60 Series (sold separately) must be installed. For maximum effectiveness, we recommend installing this kit with a single (internal) blower hood. The kit fits hood from 30-inch width up to 48-inch width. See installation instructions included with the non-duct kit ANKE60 Series.

1.2 Ducted Installation

The Broan Elite E64000 Series range hood includes many configurations: hoods with single or double internal blowers (included with the hoods), or hoods using external blowers. For hoods using external blowers, the Broan Elite E64000 Series must be installed with in-line blower models HLB3, HLB6, HLB9 or HLB11, or exterior blower model 331H, 332H, 335 or 336 only. Other blowers cannot be substituted. (Blowers sold separately).

Plan where and how the ductwork will be installed.

If installing in-line blower, refer to instructions packed with in-line blower and follow steps 1, 2, 3, 4, 10 and up of this manual.

Install proper-sized ductwork, elbows and roof or wall cap for the type of blower you are installing. If using 7", 8" or 10" round ducts, use a transition (internal blower(s) only). Use 2" metal foil duct tape to seal duct joints.

The hood distance above cooktop must not be less than 24". A maximum of 30" above cooktop is highly recommended for best capture of cooking impurities.

Distances over 30" are at the installer and users discretion.

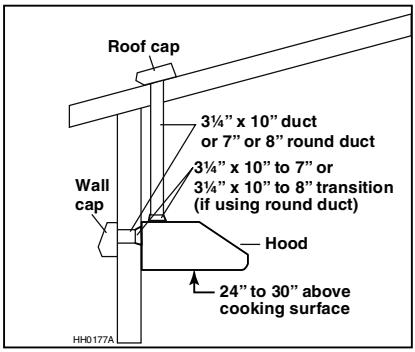

SINGLE INTERNAL BLOWER
TYPICAL DUCTWORK

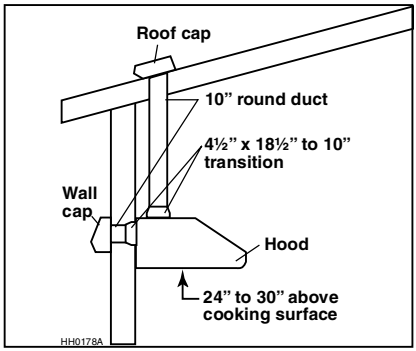

DOUBLE INTERNAL BLOWERS
TYPICAL DUCTWORK

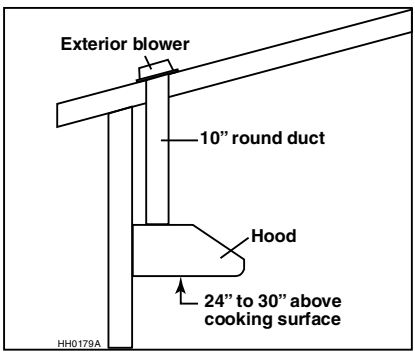

MODEL 331H, 332H, 335 OR 336
EXTERIOR BLOWER TYPICAL DUCTWORK

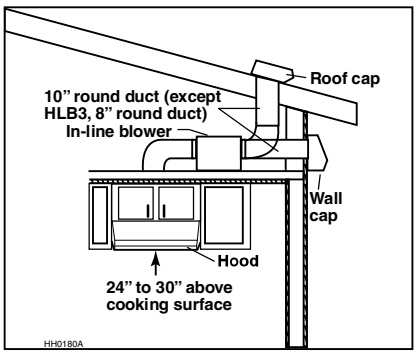

MODEL HLB3, HLB6, HLB9 OR HLB11
IN-LINE BLOWER TYPICAL DUCTWORK

2. PREPARE THE INSTALLATION

⚠WARNING

When performing installation, servicing or cleaning the unit, it is recommended to wear safety glasses and gloves.

NOTE: Before proceeding to the installation, check the contents of the box. If items are missing or damaged, contact the manufacturer.

Make sure that the following items are included:

- Range hood
- Accessories:
  - Baffle filters with handles
  - 3¼" x 10" adapter/damper (located inside internal single blower hood)
  - 4½" x 18½" adapter (screwed inside internal double blower hood)
  - In-line and exterior blower rough-in plate model 332KR (mounted inside all external blower hoods)
  - Bag of parts including:

    1 wire clamp, 9 no. 8 x 1/2", 2 wire connectors, 8 no. 8-32 x 1/4" screws, 4 no. 8 x 3/8" screws

Parts sold separately:

- In-line blower assembly HLB3, HLB6, HLB9 or HLB11 (all include transition)
- Exterior blower assembly 331H, 332H, 335 or 336
- Shielded halogen bulbs (120 V, 50 W max., GU-10) (2 required for 30" and 36" hood widths, 3 required for 42" and 48" hood widths)
- RMP Series Backsplash (optional)
- ANKE60 Series Recirculation kit, mandatory for non-ducted installation (models with built-in blower(s) only)
- Transitions, duct, elbows, dampers, wall or roof cap

Refer to pages 3 and 4 for a complete list of venting options and model numbers.

NOTES: 1. For cabinets with recessed bottom, attach three wood filler strips cut to length (not included), on each side, as shown below. See illustration and table below for wood filler strips location.

2. For hoods with external or in-line blowers, do not install the transverse wood filler strip.

Hood Widths	Center of wood strip location (**A**)
30"	13 3/8"
36"	16 3/8"
42"	19 3/8"
48"	22 3/8"

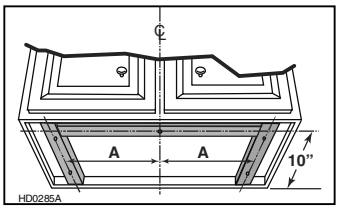

2. PREPARE THE INSTALLATION (CONT'D)

DUCTED INSTALLATIONS ONLY

Cut-out the openings for duct (**A**) and power cable (**B**), in cabinet or wall, according to the direction of discharge chosen.

See figures below.

NOTE: For all internal blower hoods, the cut-out opening for house wiring can be made in cabinet bottom OR wall, no matter the discharge chosen (vertical or horizontal).

VERTICAL DISCHARGE

HOOD WIDTHS	DIMENSION **C**
30"	13"
36"	16"
42"	19"
48"	22"

HORIZONTAL DISCHARGE

HOOD WIDTHS	DIMENSION **C**
30"	13"
36"	16"
42"	19"
48"	22"

VERTICAL DISCHARGE ONLY

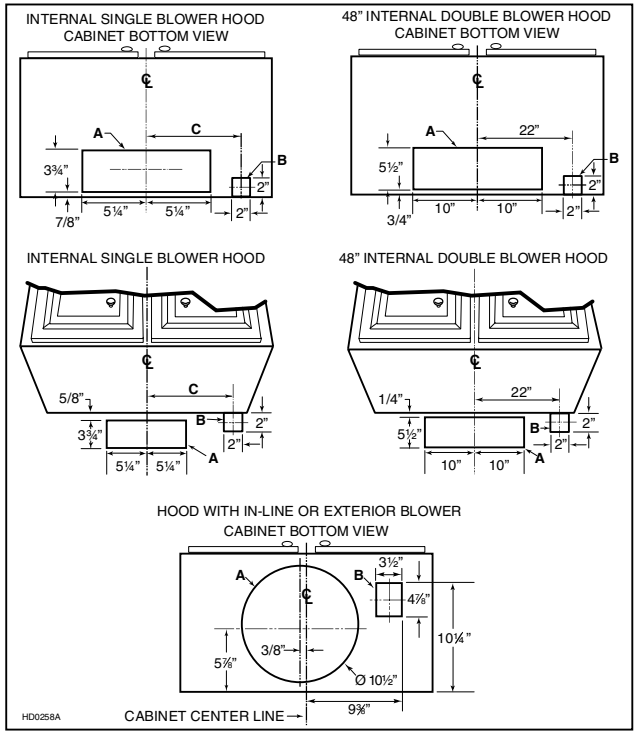

3. INSTALL BACKSPLASH (OPTIONAL)

Backsplash must be installed before the hood shell because the hood shell covers the backsplash top mounting screws. In order to be able to install the backsplash, make sure you have at least 18" clearance between bottom of hood and range control panel or cooktop. (See instructions packed with backsplash.)

4. REMOVE THE FILTERS AND THE GREASE DRIP RAIL

A. Remove tape on filters.
Remove filters from hood and set aside.

NOTE: It is recommended to start with the center one(s).

B. Remove tape on grease drip rail (**1**).
Lift out grease drip rail and set aside.

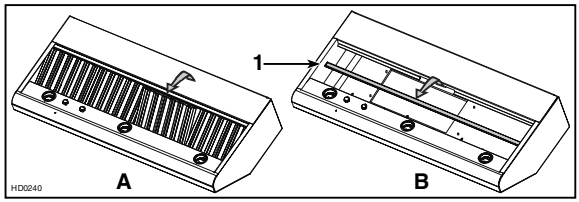

5. REMOVE THE ADAPTER (INTERNAL BLOWER HOODS ONLY)

SINGLE BLOWER HOOD

Remove both screws retaining the adapter/damper (**1**) from inner top of the hood.

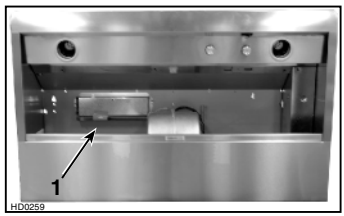

DOUBLE BLOWER HOOD

First unplug both blower motors (**1**) before removing the 3 screws retaining the adapter (**2**) to the inner top of the hood.

NOTE: The double blower hood adapter is sent unfold. See at right.

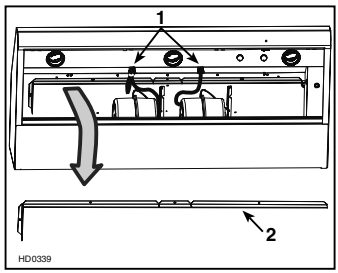

Fold the adapter and insert the male part (grey section shown in inset) into the female part (white section shown in the inset). Then, fold over each male and female end to finalize assembling the adapter.

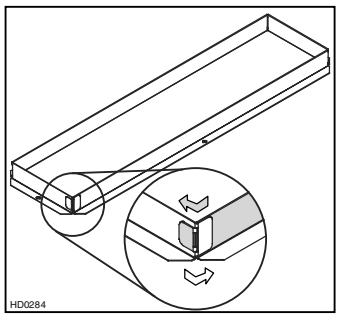

6. CHOSE THE OPENING(S) (INTERNAL BLOWER HOODS ONLY)

Remove the knockout for the chosen opening(s) (horizontal at the back of the hood or vertical on top). See illustrations below.

VERTICAL DISCHARGE

HORIZONTAL DISCHARGE

NOTE: For ducted installation only.

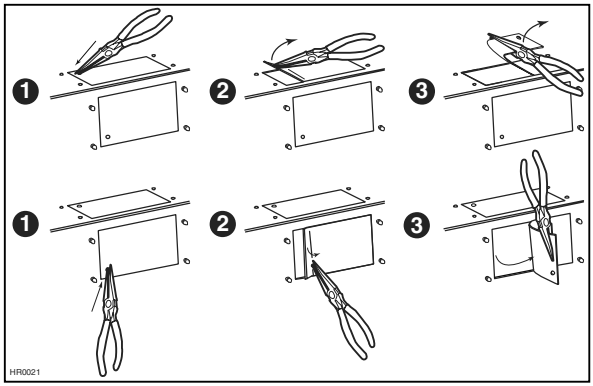

Punch out the appropriate electrical knockout hole on top (**A**) or back (**B**) of the hood. Install the wire clamp (included in parts bag).

NOTE: For a non-ducted installation, punch out the back electrical knock-out (**B**).

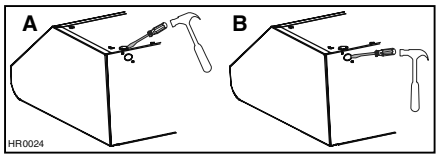

7. HORIZONTAL DISCHARGE INSTALLATION (INTERNAL BLOWER(S) ONLY)

All internal blower hoods are factory shipped with the blower(s) mounted for a vertical discharge configuration. For a horizontal discharge configuration, disassemble the blower(s) from the inner top of the hood and mount it (them) to the back panel of the hood. The procedure below applies for one or two motors.

Unplug the blower.

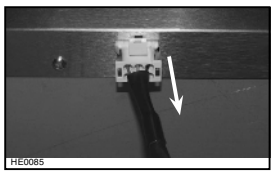

Using a 5/16" socket, remove all blower mounting screws from the inner top of the hood. Keep the screws for further use.

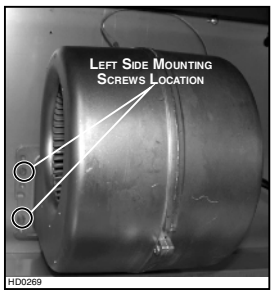

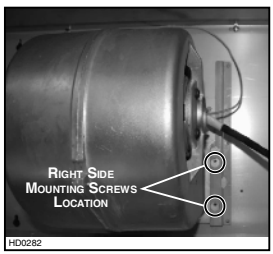

7. HORIZONTAL DISCHARGE INSTALLATION (INTERNAL BLOWER(S) ONLY) (CONT'D)

Slide the blower to disengage its flange from the retaining bracket.

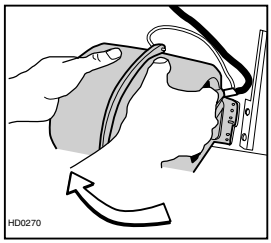

Flip the blower and engage its flange in the back wall retaining bracket.
Using a 5/16" socket and the screws previously removed, secure the blower to the hood.

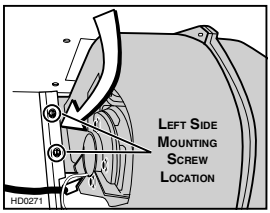

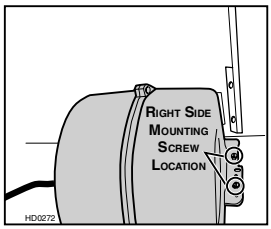

Plug the blower in.
NOTE FOR DUAL BLOWER HOOD ONLY: Cut off the plastic tie wrap on left motor cable.

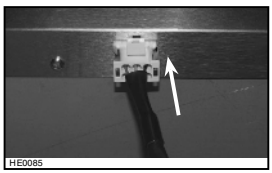

8. INSTALL THE ADAPTER AND THE TRANSITION (IF NEED BE) (INTERNAL BLOWER HOOD ONLY)

Using standard 3/8" screws provided, secure the adapter to the top (or back) of the hood (2 screws for a 3¼" x 10" adapter/damper and 4 screws for a 4½" x 18½" adapter). Seal the adapter to the hood using metal foil duct tape. For round ducting, install an appropriate sized transition and seal the joints with metal foil duct tape.

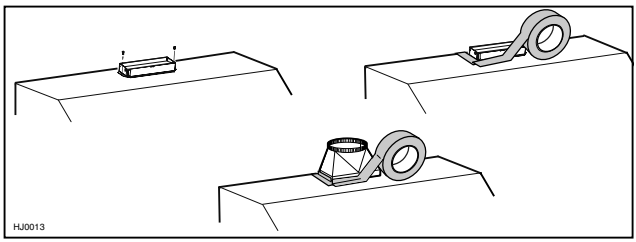

9. INSTALL ANKE60 RECIRCULATION KIT (NON DUCTED INSTALLATION ONLY)

Refer to the installation sheet included with the recirculation kit for details.

10. INSTALL THE HOOD (ALL BLOWERS)

INTERNAL BLOWER: Run power cable to installation location. Place the hood in its location. Mark the position of the screws (smaller part of the key holes [**A**]) with a pen. Remove the hood and install the (4) 1/2" double thread screws at marked positions, leaving a 1/8" gap. Remove wiring cover. Insert the cable in the hood through the wire clamp and tighten the wire clamp to secure the cable. Place the hood under the cabinet and slide it into position. Make sure the adapter (or the transition) enters the ducting. Secure the hood by tightening the screws completely. Install the last 1/2" double thread screws in the remaining holes [**B**].

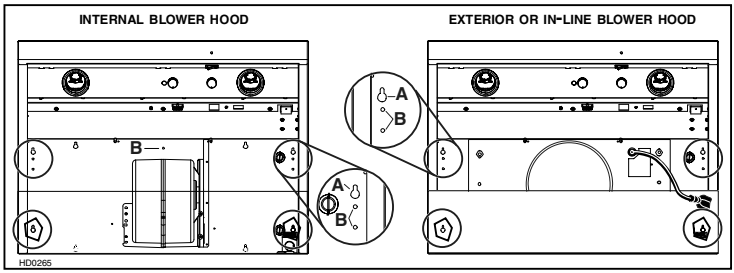

EXTERIOR OR IN-LINE BLOWER: Run power cable to installation location. Place the hood in its location. Mark the position of the screws (smaller part of the key holes [**A**]) with a pen. Remove the hood and install the (4) 1/2" double thread screws at marked positions, leaving a 1/8" gap. Remove wiring cover on top of the hood, punch-out the electrical knock-out and install the wire clamp. Insert the cable in the hood through the wire clamp and tighten the wire clamp to secure the cable. Connect wiring (see instructions included with exterior or in-line blower). Place the hood under the cabinet and slide it in position. Secure the hood by tightening the screws completely. Install the last 1/2" double thread screws in the remaining holes [**B**].

11. CONNECT WIRING (ALL BLOWERS)

⚠WARNING

Risk of electric shock. Electrical wiring must be done by qualified personnel in accordance with all applicable codes and standards. Before connecting wires, switch power off at service panel and lock service disconnecting means to prevent power to be switched on accidentally.

Remove wiring cover from rough-in plate or electrical compartment and set aside.

INTERNAL BLOWERS: Connect cable into wiring box using wire connectors. Connect BLACK to BLACK, WHITE to WHITE and GREEN or bare wire under GREEN ground screw.

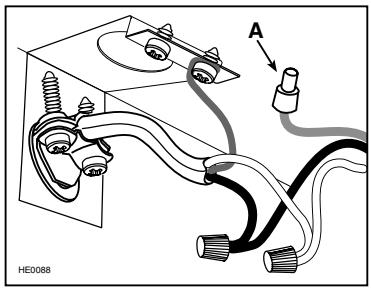

CAUTION

The ORANGE wire (A) is for make-up air device connection only. If there is no make-up air device, never remove the cap on the ORANGE wire end.

Reinstall wiring cover.

IN-LINE OR EXTERIOR BLOWERS: See instructions included with blower.

12. INSTALL THE BLOWER (EXTERIOR OR IN-LINE BLOWER)

⚠WARNING

Do not plug the 2 cords together.

Plug the 3-prong plug cord from rough-in plate to the 3-prong male connector inside the hood (**A**) and the 2-prong male connector cord from rough-in plate to the 2-prong plug inside the hood (**B**).

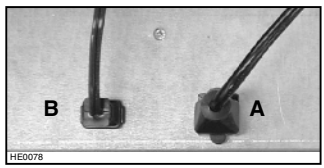

13. INSTALL LIGHT BULBS

This hood requires 120 V, 50 W max., MR16 with GU10 base or PAR16 with GU10 base, shielded halogen lamps (not included). (2 required for 30" and 36" hood widths, 3 required for 42" and 48" hood widths.)

⚠WARNING

Do not touch lamps during or soon after operation. Burns may occur. In order to prevent the risk of personal injury, only install shielded halogen lamps. Also, never install a cool beam, a dichroïc lamp, a lamp not suitable for use in recessed luminaires or identified for use in enclosed fixtures.

1. Install lamps by placing the bulb leads into their grooves in the socket.
2. Gently push upwards and turn clockwise until secure.

To remove lamps, gently push upwards and turn counterclockwise to disengage bulb leads from their grooves.

NOTE: If need be, use a rubber dishwashing glove to add grip when removing the bulb.

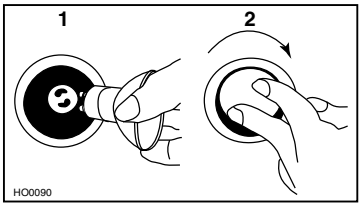

14. REINSTALL GREASE DRIP RAIL AND BAFFLE FILTERS

CAUTION

Remove protective plastic film covering filters before installing them.

Reinstall grease drip rail. The illustration at right shows how to reinsert the grease drip rail into the range hood.

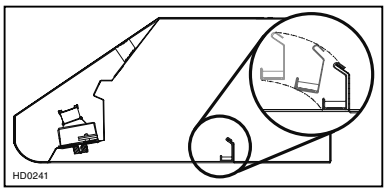

It is recommended to install side filters first and finish with center one(s).

1. Insert one end of the filter into the upper channel of the hood.
2. Raise the other end towards the inside of hood and insert in the grease drip rail of the hood.

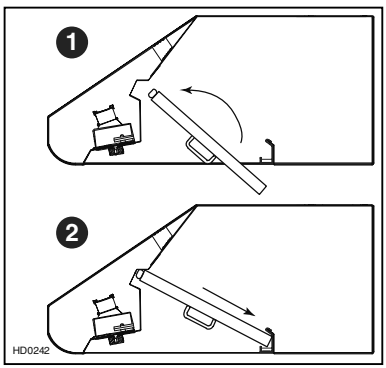

15. USE AND CARE

Baffle Filters

The baffle filters should be cleaned frequently. Use a warm detergent solution. Wash more often if your cooking style generates greater grease—like frying foods or wok cooking.

Remove baffle filters by pushing them towards the back of hood and rotating filters downward. Baffle filters are dishwasher safe. Allow filters to dry completely before reinstalling them in the hood.

Clean all-metal filters in the dishwasher using a non-phosphate detergent. Discoloration of the filter may occur if using phosphate detergent or as a result of local water conditions—but this will not affect filter performance. This discoloration is not covered by the warranty.

Grease Drip Rail

The grease drip rail should be cleaned frequently. Lift it out from the hood and use a warm detergent solution. As for the baffle filters, wash more often if your cooking style generates greater grease—like frying foods or wok cooking. Allow grease drip rail to dry completely before reinstalling it in the hood.

Blower(s) Cleaning (Internal)

Remove the filters in order to access the blower(s). Vacuum blower(s) to clean. Do not immerse in water.

Hood Cleaning

Stainless steel cleaning:

Do:	**Don't:**
• Regularly wash with clean cloth or rag soaked with warm water and mild soap or liquid dish detergent. • Always clean in the direction of original polish lines. • Always rinse well with clear water (2 or 3 times) after cleaning. Wipe dry completely. • You may also use a specialized household stainless steel cleaner.	• Use any steel or stainless steel wool or any other scrapers to remove stubborn dirt. • Use any harsh or abrasive cleansers. • Allow dirt to accumulate. • Let plaster dust or any other construction residues reach the power pack. During construction/renovation, cover the power pack to make sure no dust sticks to stainless steel surface.

Avoid when choosing a detergent:

- Any cleaners that contain **bleach** will attack stainless steel.
- Any products containing: **chloride, fluoride, iodide, bromide** will deteriorate surfaces rapidly.
- Any combustible products used for cleaning such as **acetone, alcohol, ether, benzol**, etc., are highly explosive and should never be used close to a range.

16. OPERATION

Always turn your hood on before you begin cooking to establish an air flow in the kitchen. Let the blower run for a few minutes to clear the air after you turn off the range. This will help keep the whole kitchen cleaner and brighter.

HEAT SENTRY™

This hood is equipped with a Heat Sentry™ thermostat. This thermostat is a device that will turn on or speed up the blower if it senses excessive heat above the cooking surface.

1) If blower is OFF - it turns blower ON to HIGH speed.

2) If blower is ON at a lower speed setting – it turns the blower up to HIGH speed.

⚠WARNING

The HEAT SENTRY can start the blower during a range top fire or other excessive heat situations even if the hood is turned off. In this case, it is impossible to turn the blower OFF with blower switch. If you must stop the blower, do it from the main electrical panel.

When the temperature level drops to normal, the blower will return to its original setting.

16. OPERATION (CONT'D)

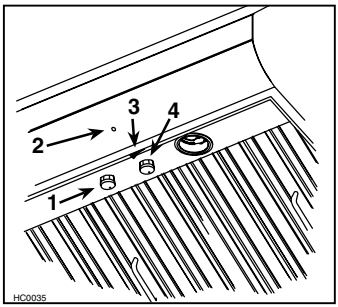

1) Halogen light knob
2) Blower operation indicator
3) ON/OFF blower switch
4) Blower speed control knob

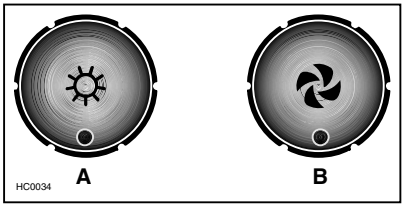

A) Halogen light knob
B) Blower speed control knob

COOKTOP LIGHTING (HALOGEN)

A rotary 3-position knob (**1**) controls the halogen lights (OFF - low intensity - high intensity).

BLOWER

The blower is operated using two controls.
Use the on/off rocker switch (**3**) to start and stop the blower. When turned on, the blower indicator (**2**) turns on and the blower operates at the previous setting of the speed control (**4**).
Turn the speed control knob clockwise to increase blower speed – counterclockwise to decrease speed.

17. WARRANTY

ONE YEAR LIMITED WARRANTY FOR BROAN ELITE PRODUCTS

Broan-NuTone LLC (Broan-NuTone) warrants to the original consumer purchaser of Broan Elite products that such products will be free from defects in materials or workmanship for a period of one year from the date of original purchase. THERE ARE NO OTHER WARRANTIES, EXPRESS OR IMPLIED, INCLUDING, BUT NOT LIMITED TO, IMPLIED WARRANTIES OR MERCHANTABILITY OR FITNESS FOR A PARTICULAR PURPOSE.

During this one-year period, Broan-NuTone will, at its option, repair or replace, without charge, any product or part which is found to be defective under normal use and service.

THIS WARRANTY DOES NOT EXTEND TO FLUORESCENT LAMP STARTERS, TUBES, HALOGEN AND INCANDESCENT BULBS, FUSE, FILTERS, DUCTS, ROOF CAPS, WALL CAPS AND OTHER ACCESSORIES FOR DUCTING. This warranty does not cover (a) normal maintenance and service or (b) any products or parts which have been subject to misuse, negligence, accident, improper maintenance or repair (other than by Broan-NuTone), faulty installation or installation contrary to recommended installation instructions.

The duration of any implied warranty is limited to the one-year period as specified for the express warranty. Some States do not allow limitation on how long an implied warranty lasts, so the above limitation may not apply to you.

BROAN-NUTONE'S OBLIGATION TO REPAIR OR REPLACE, AT BROAN-NUTONE'S OPTION, SHALL BE THE PURCHASER'S SOLE AND EXCLUSIVE REMEDY UNDER THIS WARRANTY. BROAN-NUTONE SHALL NOT BE LIABLE FOR INCIDENTAL, CONSEQUENTIAL OR SPECIAL DAMAGES ARISING OUT OF OR IN CONNECTION WITH PRODUCT USE OR PERFORMANCE. Some States do not allow the exclusion or limitation of incidental or consequential damages, so the above limitation or exclusion may not apply to you.

This warranty gives you specific legal rights, and you may also have other rights, which vary from State to State. This warranty supersedes all prior warranties.

To qualify for warranty service, you must (a) notify Broan-NuTone at one of the addresses or telephone number stated below, (b) give the model number and part identification and (c) describe the nature of any defect in the product or part. At the time of requesting warranty service, you must present evidence of the original purchase date.

18. WIRING DIAGRAMS

Broan Elite E64000 Series
Internal blower(s) hoods

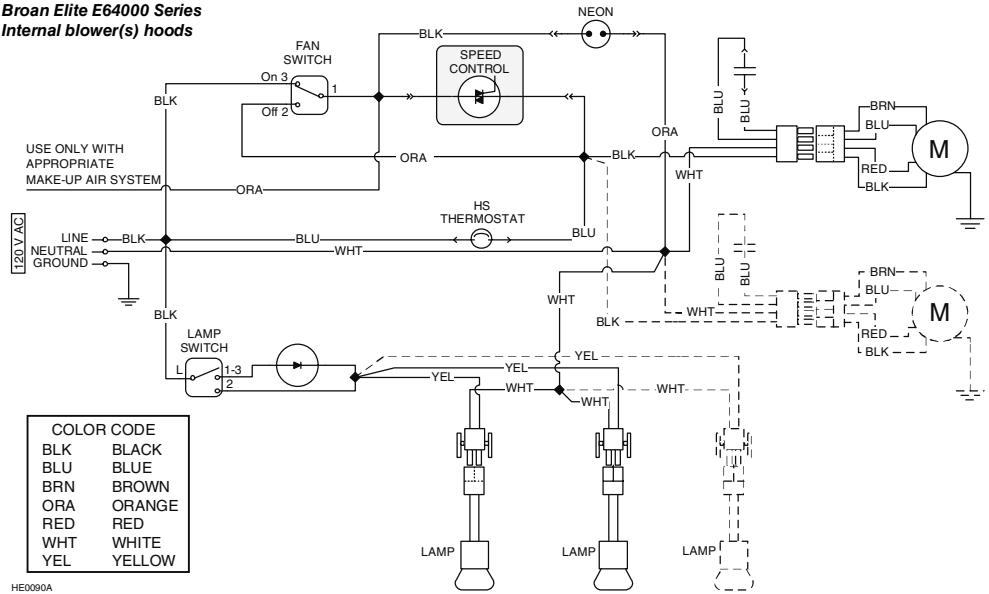

HE0090A

Broan Elite E64000 Series
Exterior or In-Line blower hoods

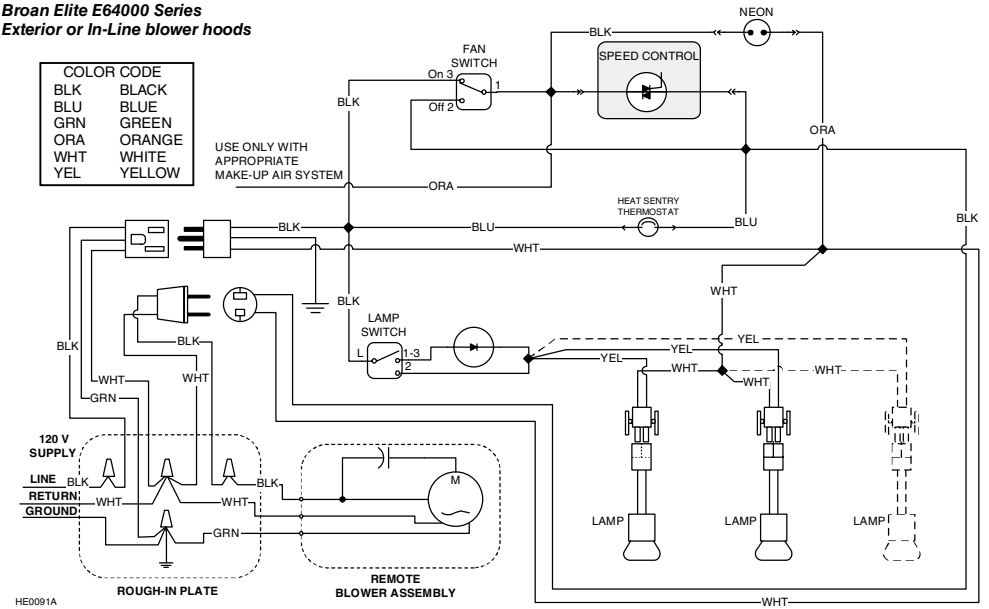

HE0091A

::kitchensource.com
☎ 1.800.667.8721

19. SERVICE PARTS

Broan Elite E64000 Series
Internal blower hoods

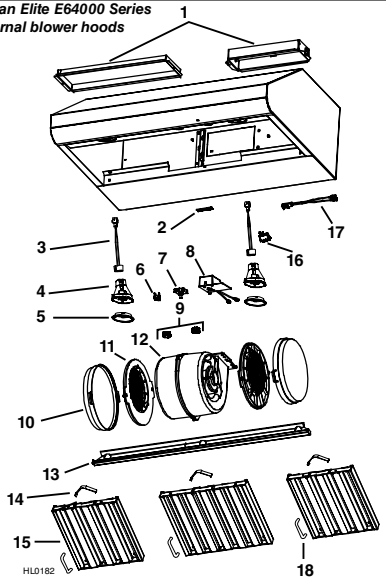

Key no.	Part no.	Description	Qty. (Hood width) 30"	36"	42"	48"
1	SV13296	Adapter/Damper 3¼" x 10" (1-Blower Hood)	1	1	1	1
	SV17797	Adapter 4¼" x 18½" (2-Blower hood)	1	1	1	1
2	SV06750	Broan Elite Logo	1	1	1	1
3	SV05917	Socket	2	2	3	3
4	SV09435	Socket holder	2	2	3	3
5	SV09434	Light trim	2	2	3	3
6	SV03435	Heat Sentry™ Thermostat	1	1	1	1
7	SV08338	Light Switch	1	1	1	1
8	SV24297	Speed Control	1	1	1	1
9	SV08355	Blower and Light Knobs (2 knobs)	1	1	1	1
10	SV08343	Replacement Charcoal Filters (pair)	1	1	1	1
11	SV08344	Charcoal Filter Supports (pair)	1	1	1	1
12	SV08097	Internal Motor (1 or 2, depending on hood model)	1	1/2	1/2	1/2
13	SV17640	Grease Rail 30"	1	-	-	-
	SV17641	Grease Rail 36"	-	1	-	-
	SV17642	Grease Rail 42"	-	-	1	-
	SV17643	Grease Rail 48"	-	-	-	1
14	SV08337	Filter Spring (set of 6)	1	1	1	1
15	SV17600	Baffle Filter 8.84" x 9.80"	2	-	2	-
	SV17603	Baffle Filter 11.84" x 9.80"	1	3	2	4
16	SV08339	Blower Rocker Switch	1	1	1	1
17	SV08093	Pilot Lamp Ass'y	1	1	1	1
18	SV07680	Baffle Filter handle with Screws	3	3	4	4
*	SV08342	Capacitor 25 µF	1	1	1	1
*	SV08341	Installation Guide	1	1	1	1
*	SV08353	Parts Bag: 2 Wire connectors, 9 Screws no. 8 x 1/2", 1 Wire clamp, 8 Mechanical Screws no. 8-32 x 1/4", 8 Screws no. 8 x 3/8"	1	1	1	1

* Not shown.

Broan Elite E64000 Series
Exterior or In-Line blower hoods

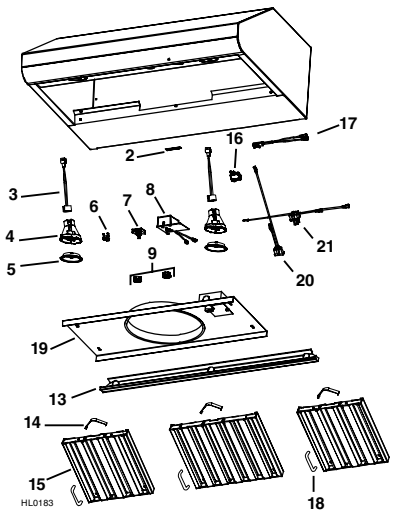

Key no.	Part no.	Description	Qty. (Hood width) 30"	36"	42"	48"
2	SV06750	Broan Elite Logo	1	1	1	1
3	SV05917	Socket	2	2	3	3
4	SV09435	Socket holder	2	2	3	3
5	SV09434	Light trim	2	2	3	3
6	SV03435	Heat Sentry™ Thermostat	1	1	1	1
7	SV08338	Light Switch	1	1	1	1
8	SV03501	Speed Control	1	1	1	1
9	SV08355	Blower and Light Knobs (2 knobs)	1	1	1	1
13	SV17640	Grease Rail 30"	1	-	-	-
	SV17641	Grease Rail 36"	-	1	-	-
	SV17642	Grease Rail 42"	-	-	1	-
	SV17643	Grease Rail 48"	-	-	-	1
14	SV08337	Filter Spring (set of 6)	1	1	1	1
15	SV17600	Baffle Filter 8.84" x 9.80"	2	-	2	-
	SV17603	Baffle Filter 11.84" x 9.80+"	1	3	2	4
16	SV08339	Blower Rocker Switch	1	1	1	1
17	SV08093	Pilot Lamp Ass'y	1	1	1	1
18	SV07680	Baffle Filter handle with Screws	3	3	4	4
19	SV08354	Rough-in Plate 10" Round	1	1	1	1
20	SV13923	Female Connector	1	1	1	1
21	SV13924	Male Connector	1	1	1	1
*	SV08342	Capacitor 25 µF	1	1	1	1
*	SV08341	Installation Guide	1	1	1	1
*	SV08353	Parts Bag: 2 Wire connectors, 9 Screws no. 8 x 1/2", 1 Wire clamp, 8 Mechanical Screws no. 8-32 x 1/4", 8 Screws no. 8 x 3/8"	1	1	1	1

* Not shown.

REPLACEMENT PARTS AND REPAIRS
In order to ensure your unit remains in good working condition, you must use Broan-NuTone genuine replacement parts only. Broan-NuTone genuine replacement parts are specially designed for each unit and are manufactured to comply with all the applicable certification standards and maintain a high standard of safety. Any third party replacement part used may cause serious damage and drastically reduce the performance level of your unit, which will result in premature failing. Broan-NuTone recommends to contact a certified service depot for all replacement parts and repairs.