kitchensource.com
1.800.667.8721

BROAN®

Under-Cabinet

SAHALE

The slim and refined lines of Sahale bring a refreshing change to today's kitchens. Bright ENERGY STAR® certified LED lighting complements your cooking experience and three fan speeds make cooking more enjoyable.

SIZE	BLACK	STAINLESS	WHITE	GREASE FILTERS (replacement)	NON-DUCTED FILTERS
30-in.	BKDEG130BL	BKDEG130SS	BKDEG130WW	HPFA3A30 (Type "C3")	HPF30 (Type "Xc")

PERFORMANCE

Duct Orientation	Size	Damper	Sones			CFM @ 0.1 Ps		
			Normal	Medium	High	Normal	Medium	High
Vertical - Rectangular	3¼-in. x 10-in.	Included	1.2	3.0	5.5	150	200	280
Horizontal - Rectangular	3¼-in. x 10-in.	Included	1.2	3.0	5.5	110	160	250
Round - Vertical	7-in.	Sold Separately	1.5	3.0	5.5	160	210	300

FEATURES

Control type	3-speed Capacitive Touch
Delay off	no
Filter Clean Reminder	yes
Heat Sentry™	no
ADA Capable	yes
Lighting	2-level ENERGY STAR® LED (included)
Grease Filters	Deluxe Micro Mesh (Qty. 2)
Installation Hardware	EZ1 brackets
ENERGY STAR®	yes
Recirculation	Non-ducted filters sold separately

AC INPUT

120V, 60 Hz - 0.65 AMPS

OPTIONAL ACCESSORIES

7-in. Round Damper	BP87
ADA Wiring Kit	HAWRK3 (Available August, 2017)

MOUNTING HEIGHT

18-in. to 24-in. from cooktop to bottom of hood

LIMITED WARRANTY

1-year
3-year (LED modules only)
(See installation manual for full warranty text.)

FOR INDOOR USE ONLY

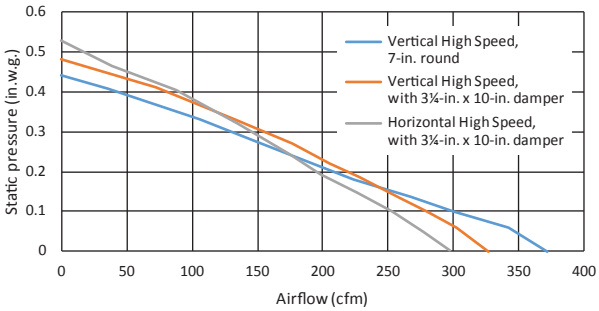

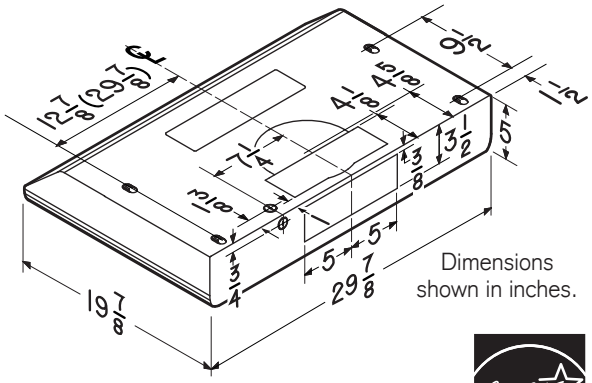

ENERGY STAR

HVI-2100 CERTIFIED RATINGS comply with new testing technologies and procedures prescribed by the Home Ventilating Institute, for off-the-shelf products, as they are available to consumers. Product performance is rated at 0.1 in. static pressure, based on tests conducted in AMCA's state-of-the-art test laboratory. Sones are a measure of humanly-perceived loudness, based on laboratory measurements.

99045745B

SPECIFICATION SHEET
SAHALE - BKDEG1 SERIES

kitchensource.com
1.800.667.8721