IMPERIAL
KITCHEN VENTILATION

Contemporary Island Slim Line

The power you need. The quiet you want!

28” Depth, 4” High	MODEL
♦ 675± CFM ♦ 7” Round Duct Order duct cover separately from table below at no charge.	ISN2036PSSB-SS ISN2042PSSB-SS ISN2048PSSB-SS ISN-STK-SS
♦ 810± CFM ♦ 8” Round Transition Order duct cover separately from table below at no charge.	ISN2036PSSB-8-SS ISN2042PSSB-8-SS ISN2048PSSB-8-SS ISN-STK-SS
♦ 1370± CFM ♦ Two (2) 8” Round Transitions Order duct cover separately from table below at no charge.	ISN2042PS1-TWSB-8-SS ISN2048PS1-TWSB-8-SS ISN-STK-SS

ISN2000PSSB

FEATURES:

- 304 Marine Grade Stainless Steel.
- Variable Controls
- Sones: 1.5 to 4.6
- Filters: Slim Baffle
- Front /Back Panel Lighting: LED bulbs Included.
- Heat Controlled Thermostat, Fire Safety Controls. Activates at 130 degrees.
- Electrical: 115 AC, 60 Hz, 9 Amps. For proper installation, unit must be hard wired. Suggested use with 15 Amp Circuit.
- Suggested Distance Code: 36” above cooking surface.

OPTIONS:

- Angle cut duct covers additional charge. Must provide drawing and dimensions.
- Remote wiring.
- Black or White Powder Coat, additional charge.
  Ex: ISN2036PSSB-WH (White)
- Matte White or Black, additional charge.
  Ex: ISN2036PSSB-MB (Matte Black)
  (NOTE: To clean, use mild soap and warm water)
- Custom Sizes Available.

NO Performance Warranty over BBQ Grills/Griddles.

Seamless Duct Cover & Wood Mounting Frame
(Duct Cover Not Telescopic)
Order by model number below.
Calculated on mounting height of 36” above cooking surface.

MODEL—Standard Sizes	CEILING HEIGHT
ISN-STK-SS-8	8” High for 7’ Ceiling
ISN-STK-SS-20	20” High for 8’ Ceiling
ISN-STK-SS-32	32” High for 9’ Ceiling

MODEL—Custom Size
ISN-STK-SS = Custom Size Provided at no charge up to 48” High
Provide Height: Ex: ISN-STK-SS-26”
Call for Additional charge for duct covers over 48” High.

Call for Immediate Assistance (800) 851-4192

Wood Mounting Frame & Duct Cover—TOP VIEW

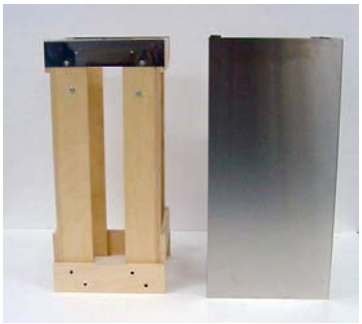

Wood Mounting Frame & Duct Cover

c UL us LISTED

Island Specifications

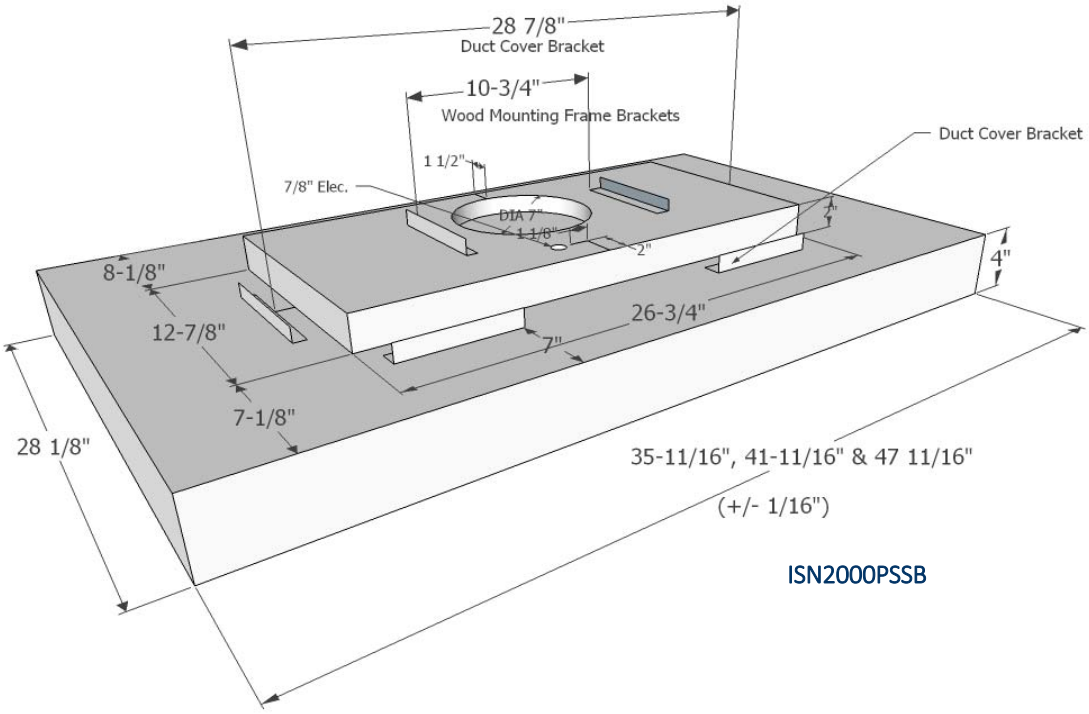

ISN2000PSSB

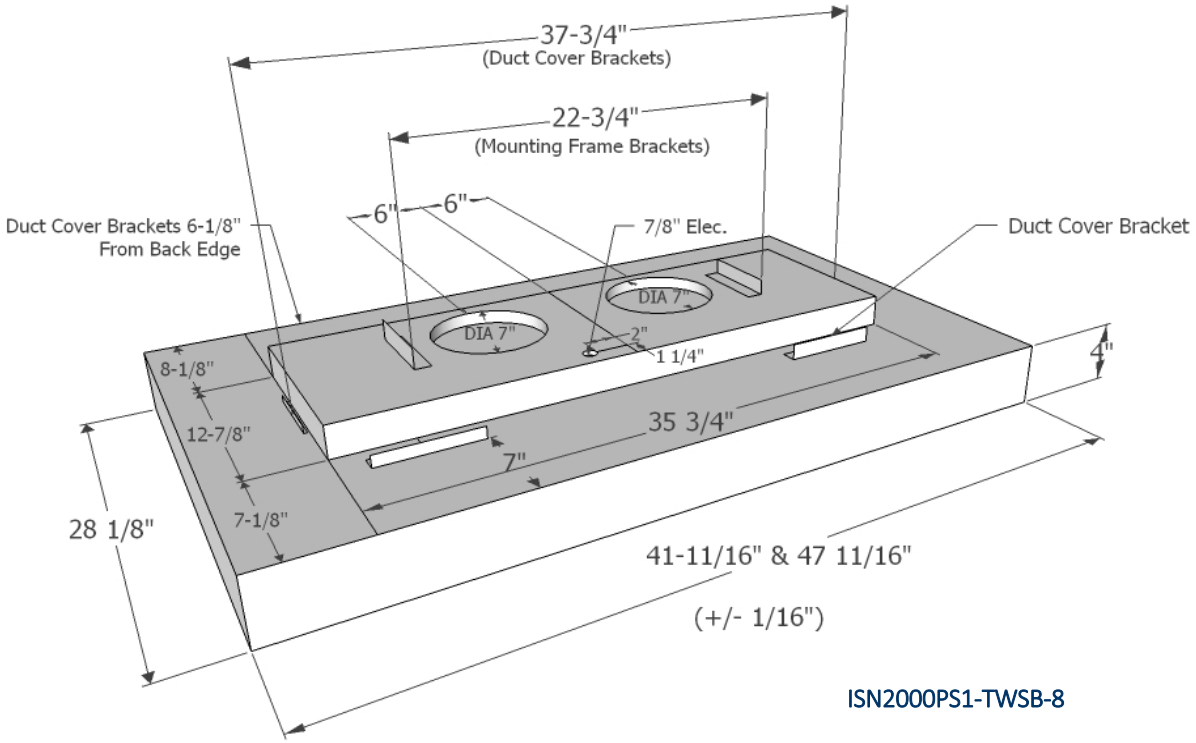

ISN2000PS1-TWSB-8

NOTE: Duct Cover Depth & Width

Single Duct: 14-7/8" D X 28-7/8" W

Twin Duct: 14-7/8" D X 37-7/8" W

SEVEN YEAR, IN HOME, LIMITED WARRANTY, THE BEST IN THE INDUSTRY!

All dimensions are (+/-) 1/16" and are subject to change. Drawings are not to scale.