Enclume

Décor Basket Racks
DR17a & b

Enclume Décor racks are the ultimate in quality, design, strength and function. Congratulations for owning one of the finest storage racks made.

WARNING:
READ ALL OF THE INSTRUCTIONS BEFORE ASSEMBLING AND USING YOUR RACK.

Enclosed you will find everything needed for the assembly of your pot rack. Two people make assembly and installation easier. The parts and hardware included are:

Components included:
1 - Hammered Steel Rectangle Basket
1 – Top Cross Bar
4 - Curved Brackets
1 - Grid

Hardware included:
2 - Ceiling Screw Hooks (Large)
2 – 6” Chains
2 - 'S' Hooks 2"
12 - Pot Hooks (DRPHS)
6 - Grid Brackets - DRGB
1 – 5/32" Hex Key
2 – 1/4 x 5/8" Button Head Screws

ASSEMBLY AND INSTALLATION INSTRUCTIONS

1) **Lay rack body (rectangle) on firm surface. Protect surface with corrugated box if necessary.**
2) **The curved brackets are pre-assembled as a set, each set will have one curved bracket with a "tapped" (threaded hole) and one with a drilled hole (no threads). Remove the ¼” x 5/8" button head from one set. Slipping each curved bracket (the end with the tight "U" shape bend) onto the rack body one on each side of the rack. Then place the Top Cross Bar between the two tops of the Curved Brackets; using the ¼” x 5/8” button head screw, attach the two curved brackets and the cross bar together. (Please use the hole closest to the end of the cross bar as the larger of the two holes must be used to hang fixture).**
3) **Repeat process for other set of curved brackets. Securely tighten all screws at this time.**
4) **Make sure that your Curved Brackets are evenly spaced from each end of your rack. The DR17a has hanging centers of 16” and the DR 17b has hanging centers of 14”.**
5) **Your Rack may be carefully anchored into solid wood of the ceiling joist or beams, using the ceiling hooks. If you are mounting in other than solid wood, use the Toggles and follow the instructions in the kit. Carefully measure the area where the rack is to be hung and install the ceiling screw hooks (14" apart for the DR17b or 16” apart for the DR17a) into the ceiling joists.**
6) **Place four grid brackets over the sides of the rack on the inside of each of the four curved brackets with the straight end of the brackets facing towards the inside of the rack. Place one grid bracket on each end of the rectangle. Next place the grid on top of the grid brackets. (See note next page).**
7) **Insert the "S" hooks into each of the remaining holes in the cross bar and the other end through one end of the chain. Carefully lift your rack into place and attach the other end of the chain onto the ceiling screw hooks.**

.

8) **Hang your heavier items on the straight portion of the rack body or the center of the grid area.**
9) **All of our hammered steel racks are finished with an industrial wax designed to give years of protection to the rack. Cleaning is done easily with a damp cloth. Dry thoroughly after cleaning. If a touch up is ever needed we recommend a "Pledge" like wax product.**

Note: Please turn grid over so crossbars that extend the width of the grid are facing down. This will help to keep grid from sliding out of position when rack is in use.

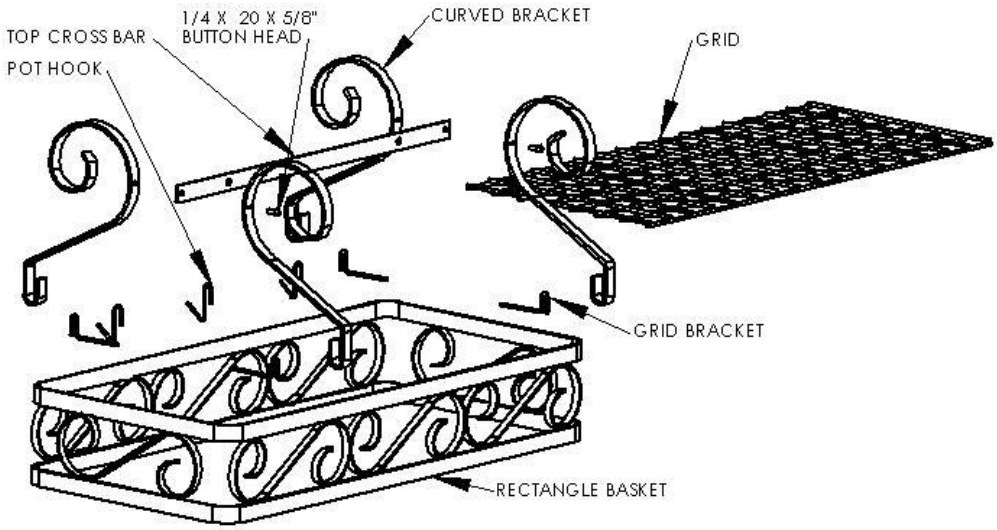

WARNING

It is important that your rack is assembled correctly. If the unit is assembled or used incorrectly, it could become unstable and collapse, possibly causing injury.

Limited Warranty: This product is warranted to be free of material defects for a period of five years from the date of purchase. Customer's exclusive remedy shall be the repair or replacement of the defective product and shall be subject to the following conditions: (1) notice of any defect is received by Enclume within the warranty period and (2) customer returns the defective product to Enclume Design Products, Inc. , 24 Colwell St.. , Port Hadlock, WA 98339, *postage prepaid* within *20* days following a return authorization number (which may be obtained by telephoning the number at the bottom of this instructions) being provided to the customer by Enclume. There are no other warranties, expressed or implied. **THERE ARE NO WARRANTIES OF MERCHANTABILITY OR FITNESS FOR A PARTICULAR PURPOSE. ENCLUME SPECIFICALLY DISCLAIMS ANY AND ALL INCIDENTAL OR CONSEQUENTIAL DAMAGES ARISING OUT OF THE PURCHASE OR USE OF ENCLUME'S PRODUCTS.**