kitchensource.com
1.800.667.8721

STC-2

Stainless Steel Strainer

Kräus®
SPECIFICATION SHEET

Finish
Stainless Steel

Material
Stainless Steel

Features

- Premium Stainless Steel Construction
- Fits Standard 3.5" Drain Opening
- Allows water to drain easily when installed
- Conceals garbage disposal and waste fittings for a seamless look

Dimensions
4 1/2" x 5/8"

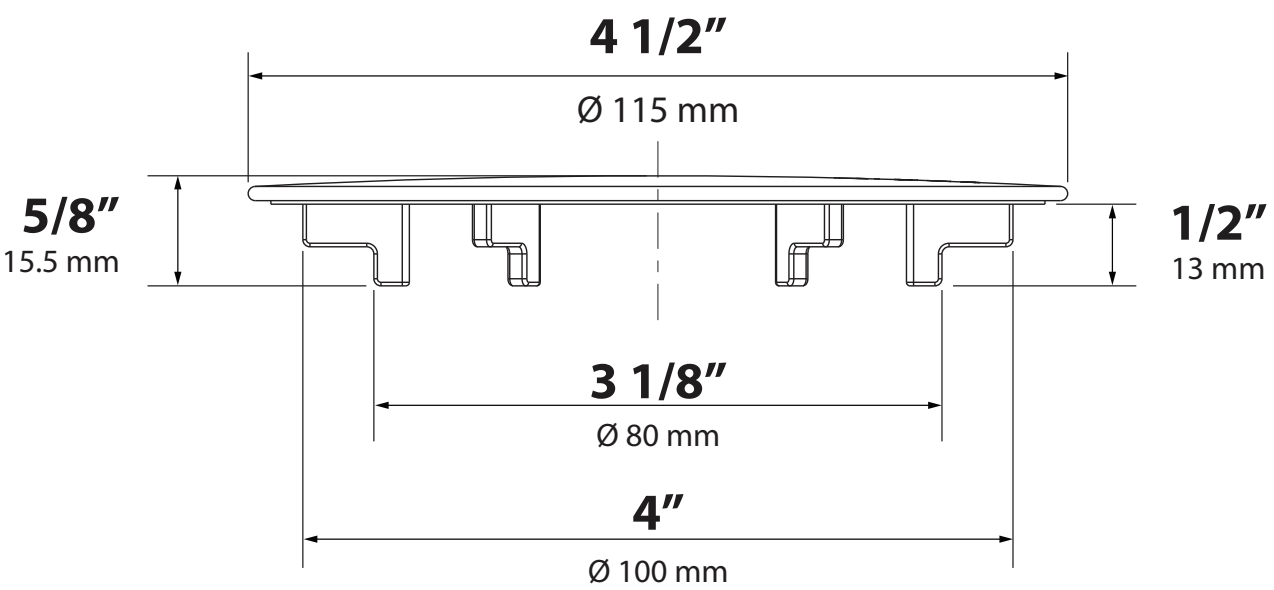

REV. December 8, 2017