::kitchensource.com
☎ 1.800.667.8721

KWU110-27

27 Inch Undermount Workstation Single Bowl Stainless Steel Kitchen Sink

Kräus®
SPECIFICATION SHEET

Sink Dimensions
Overall Dimensions: 27" x 19"
Bowl Dimensions: 25" x 16"
Sink Depth: 10"

Features
- 16 Gauge Stainless Steel Construction
- Undermount Single Bowl Sink
- Required Minimum Cabinet Size: 30" Left to Right, 24" Front to Back
- Rear Off-Set Drain
- 3 1/2" Drain Opening
- NoiseDefend Undercoating and Sound Dampening Pads

Accessories Included
- Strainer ST-1
- Cover Cap STC-2
- Bottom Grid KBG-UN1-27
- Rolling Mat KRM-11BL
- Cutting board KCB-WS103BB
- Cut-Out Template
- Mounting Hardware

CODES/STANDARDS:
Product Certification
cUPC (ASME A112.19.3/CSA B45.4)

NOTE: It is not recommended to install this sink with a negative reveal. Doing so will prohibit the use of any workstation accessories as they will not fit.

Warranty
Kraus Limited Lifetime Warranty

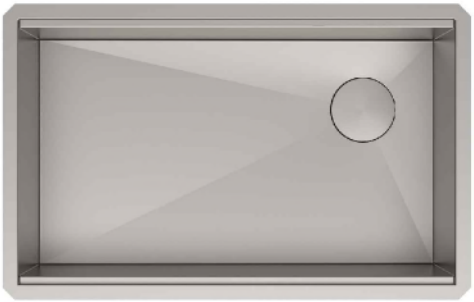

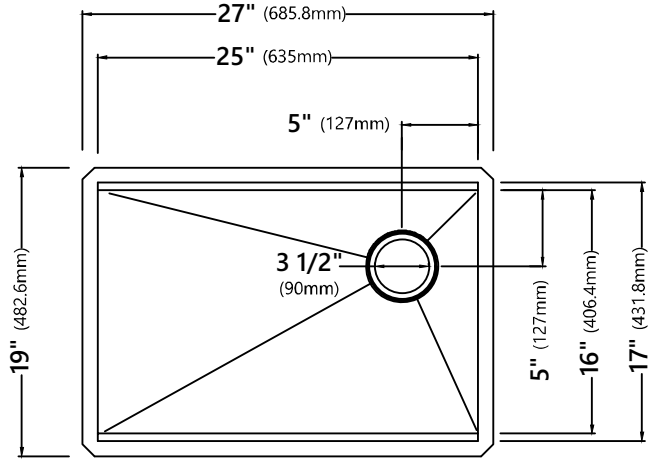

kitchensource.com
1.800.667.8721

Kräus
SPECIFICATION SHEET

KBG-UN1-27

Stainless Steel Kitchen Sink Bottom Grid

Grid Dimensions
Overall Dimensions: 24 5/8" x 15 5/8" x 7/8"

Features
- Commercial grade stainless steel construction
- For Use with the KWF210-27, KWF210-27-PGM, KWU110-27 and KWU110-27-PGM kitchen sinks
- Protects bottom of sink from daily wear and tear
- Rubber feet provide additional protection

Available Finishes
- Stainless Steel
- PVD Gunmetal

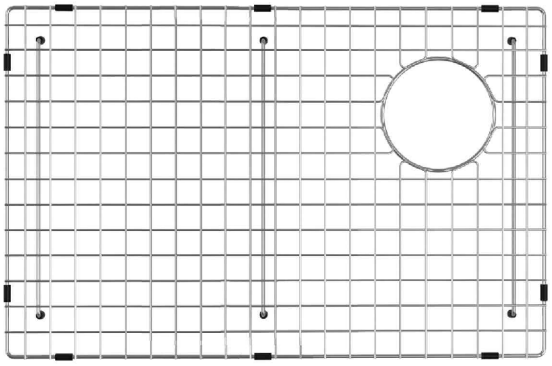

Warranty
Kraus One Year Limited Warranty

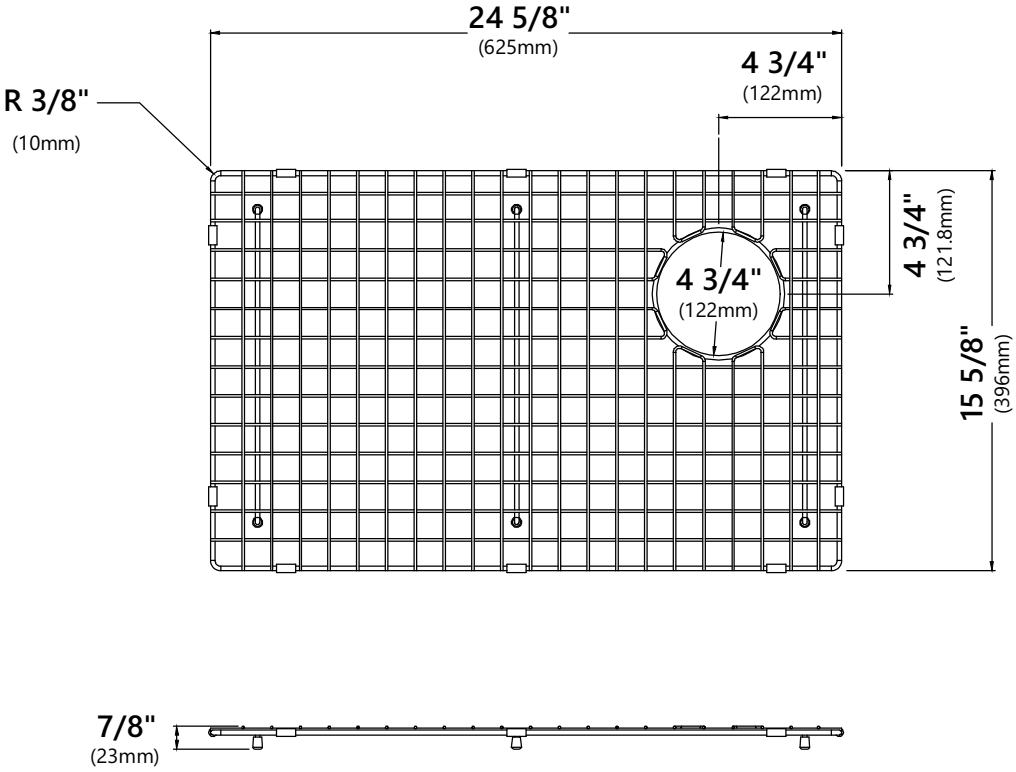

kitchensource.com
1.800.667.8721

Kräus
SPECIFICATION SHEET

ST-1

Stainless Steel Kitchen Sink Strainer

Strainer Dimensions
Overall Dimensions: ⌀4 1/2" x 3 3/4"

Features
- Premium Stainless Steel construction
- Fits Standard 3 1/2" or 4" Drain Opening
- Open/Close Stopper Prevents Debris from Clogging Drain Pipe

Available Finishes
- Stainless Steel

Warranty
Kraus 1 Year Limited Warranty

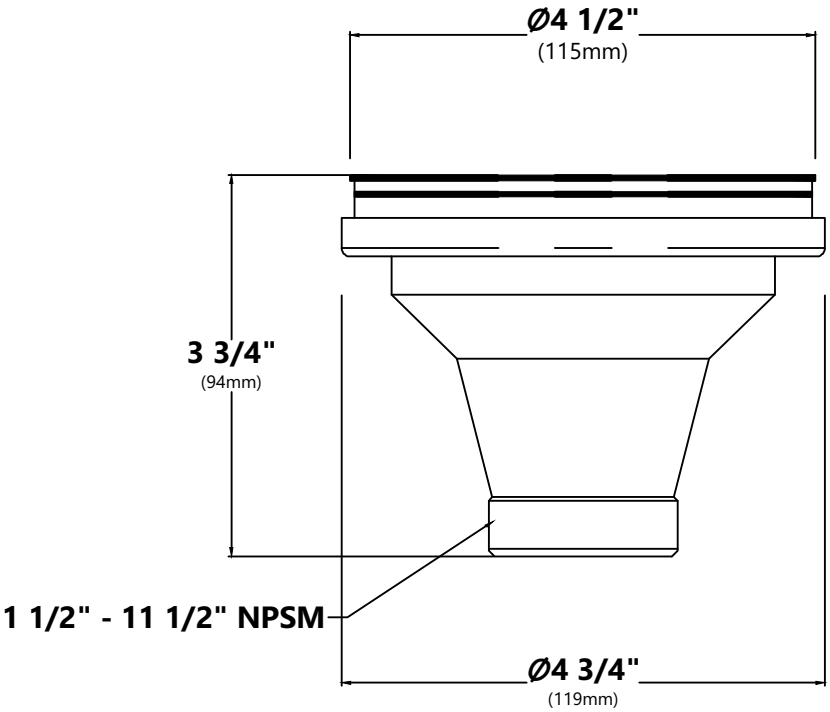

REV. April 6, 2021

kitchensource.com
1.800.667.8721

Kräus

SPECIFICATION SHEET

STC-2

Removable Decorative Drain Cover

Drain Cap Dimensions
Overall Dimensions: Ø4 1/2" x 5/8"

Features
- Premium Stainless Steel Construction
- Fits Standard 3 1/2" Drain Opening
- Allows Water to Drain Easily When Installed
- Conceals Garbage Disposal and Waste Fittings for a Seamless Look
- Compatible with Standart Pro™, Pax™, Kore™, Outlast Microshield™ and Premier™ Kitchen sinks

Available Finishes
- Stainless Steel
- PVD Gunmetal

Warranty
Kraus 1 Year Limited Warranty

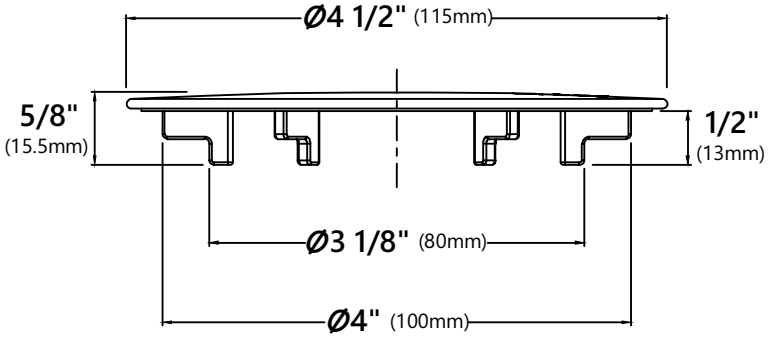

REV. April 6, 2021

::kitchensource.com
☎ 1.800.667.8721

Kräus®

SPECIFICATION SHEET

KRM-11

Multipurpose Roll-Up Dish Drying Rack

Rolling Mat Dimensions
Overall Dimensions: 16 7/8" x 12" x 3/8"

Features
- Roll-up over-the-sink drying rack
- Stainless steel construction with non-slip silicone coating
- Rolls up into a compact cylinder for storage
- Dishwasher safe
- Heat-safe up to 400° F
- Holds up to 85 lbs
- BPA-free and FDA-approved
- For Use with KFR4-33, KGF1-30, KGF1-33, KGF2-30, KGF2-33, KWF210-30, KWF210-33, KWF210-36, KWF410-30, KWF410-33, KWF410-36, KWT310-30, KWT310-33, KWT311-25, KWU110-27, KWU110-30, KWU110-32, KWU111-17, KWU111-23, KWU112-33, KWU120-45 and KWU210-57 kitchen sinks

Available Colors
- Black
- Brown
- Dark Blue
- Dark Grey
- Light Grey
- Aqua
- Green
- Red
- Yellow

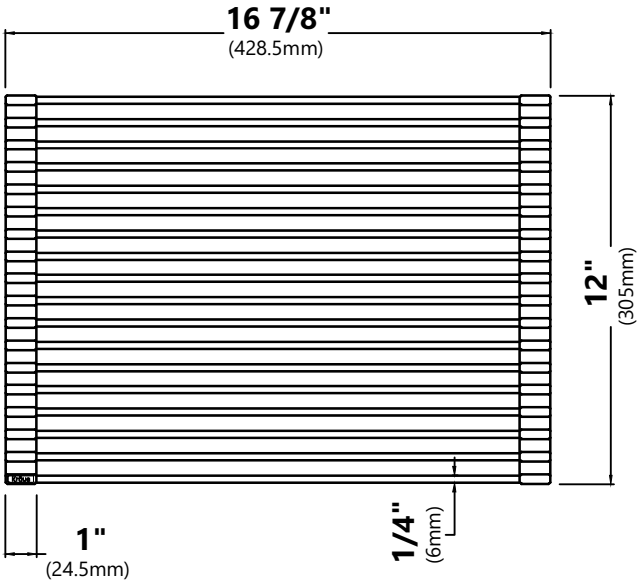

Warranty
Kraus One Year Limited Warranty

kitchensource.com
1.800.667.8721

Kräus
SPECIFICATION SHEET

KCB-WS103

Cutting Board

Cutting Board Dimensions
Overall Dimensions: 16 3/4" x 12" x 3/4"

Features
- Designed to Use Over the Sink and On the Counter
- Outer Groove Traps Liquids to Prevent Messy Counter
- BPA-free and FDA-approved

Available Finishes
- Bamboo
- Acacia
- Sapele

NOTE: Each piece may feature unique color variations
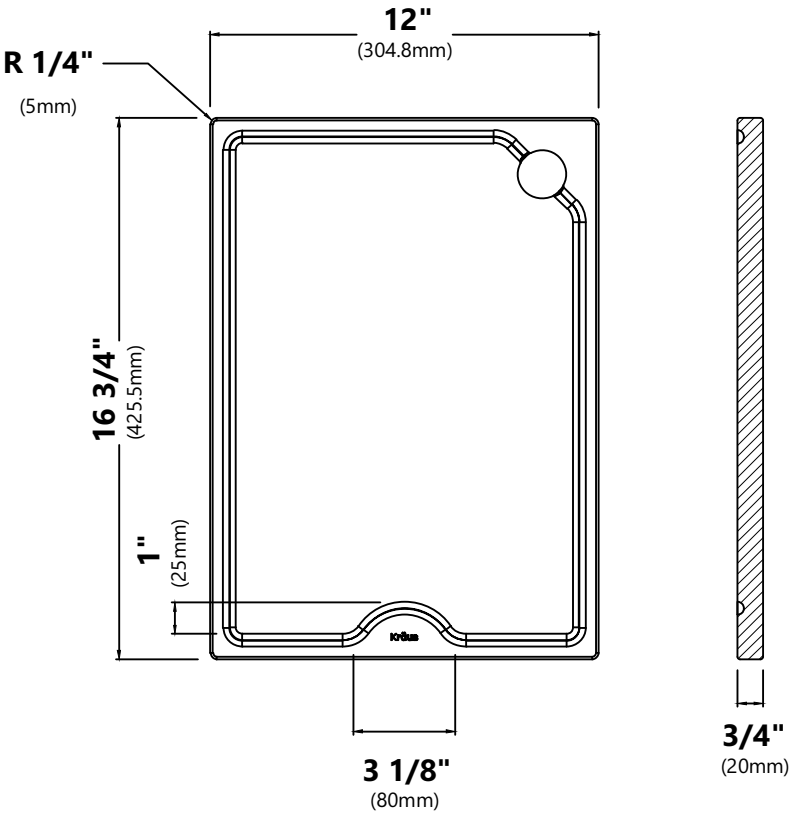
Warranty
Kraus One Year Limited Warranty