JULIEN Home Refinements

Kitchen sink • 16ga Stainless Steel • Undermount installation

003283 | Classic™

Project name: _____

Specifier: _____ Contractor: _____

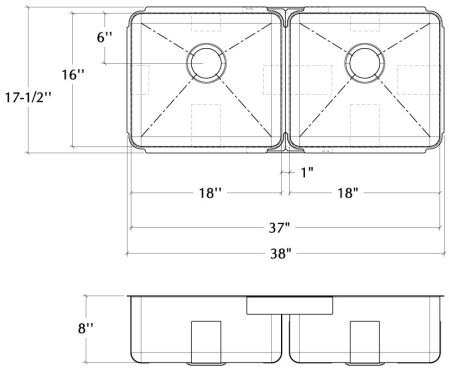

Features

- Handcrafted in Canada using recycled American stainless steel
- Commercial grade
- 16 ga material thickness
- Corrosion resistant 304 series stainless steel (18/10)
- Elegant no. 4 brushed finish (appliance finish)
- Highly efficient sound deadening pads
- Practical flat sink bottom and straight bowl sides
- Stylish and functional bowl bottom grooves
- Optional in-bowl storage drawer
- Rear 3 1/2" drain placement
- Limited lifetime warranty

Standards compliance

- ASME A112.19.3
- CSA B45.0
- CSA B45.4

Optional accessories

- Colander 205012
- Drain fitting 100056
- Drain fitting 100080
- Drain fitting 100081
- Drain fitting 100082
- Drain fitting 100083
- Grid 200203

Sink dimensions

Model	Overall	Bowls	Depth	Cabinet Size*	Drain
003283	38" x 17 1/2"	LH 18" x 16" RH 18" x 16"	8" 8"	42"	3 1/2"

* Cabinet Size is the Recommended Cabinet Size

Product specifications

Sink type to be undermount double bowl. Sink to be handcrafted from a single sheet of 16 ga stainless steel having 18/10 chrome/nickel content and a no.4 brushed finish. Sink to feature bowl bottom grooves, rear 3 1/2" drain placement and sound deadening pads. Sink overall dimensions to be 38" left-to-right and 17 1/2" front-to-back. LH Bowl dimensions to be 18" left-to-right and 16" front-to-back. RH Bowl dimensions to be 18" left-to-right and 16" front-to-back. Sink to feature 29mm radius corners. Sink to be Julien Classic™ collection model 003283 with bowl depth of 8" on LH bowl and 8" on RH bowl.

Warranty

Julien inc. offers a LIMITED LIFETIME WARRANTY on the fix components of its stainless steel sinks against defects of material and workmanship. For further details on our product warranty, please refer to our catalog or Web site.

::kitchensource.com
☎ 1.800.667.8721