kitchensource.com
1.800.667.8721

FAUCET SPECIFICATIONS

VIGO

Pull-Down Spray Kitchen Faucet
Model VG02003

MODEL VG02003

FEATURES

· Solid brass construction
· Spiral pull-down spray head
· Spray face that resist mineral build up
· Finish resist corrosion and tarnishing
· Ceramic disk cartridge
· Single hole construction
· 360° Swivel
· Single lever sprayer

PACKING LIST

· Faucet Assembly
· Sprayer
· Allen Key
· Two Metal braided hoses
· Weight
· Plastic Holder

DIMENSIONS

MODEL #	HOLE DIAMETER	FAUCET HEIGHT	SPRAYER REACH
VG02003	1 3/8"	18 1/2"	8 1/4"

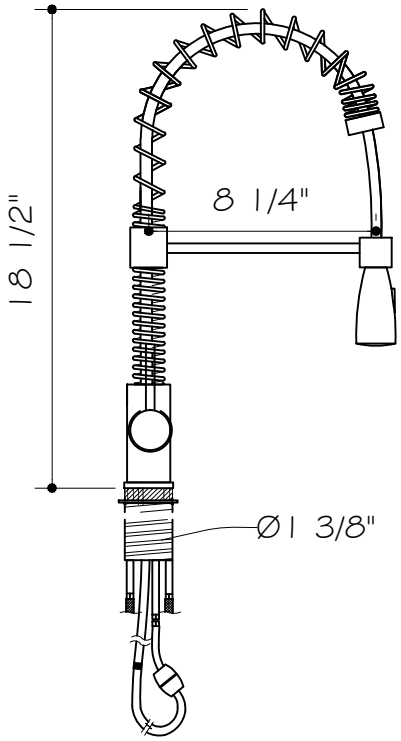

* = +/- 1"

::kitchensource.com
☎ 1.800.667.8721

VIGO

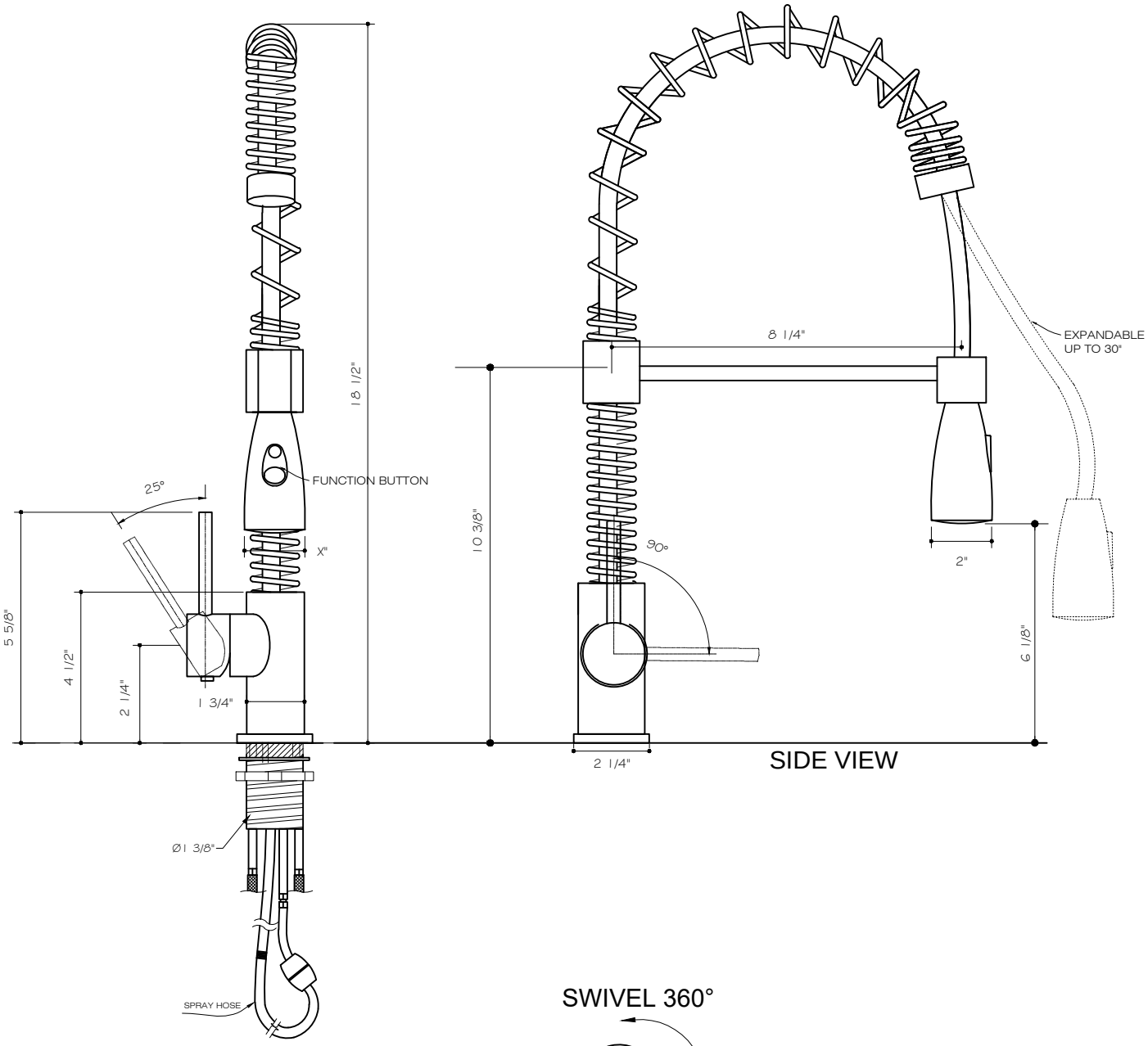

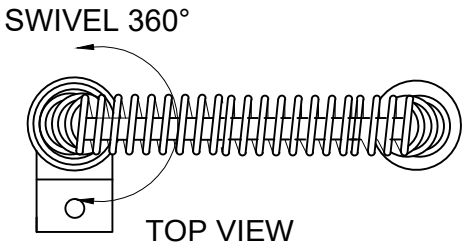

FRONT VIEW

VG02003

THE MEASUREMENTS IN INCHES ARE ROUNDED TO THE NEAREST 3/8"

::kitchensource.com
☎ 1.800.667.8721

FLOW RATE REGULATIONS

VIGO

This product meets the CEC requirements. It is up to the discretion of the client to modify the product with the provided restrictor. Doing so will remove the ability for the product to meet certain low flow standards. Please talk to your local or statewide plumbing enforcement agency prior to modifying. Vigo is not responsible for any alterations and the affects that may come with altering the product post sale and highly advises that the client only install the product that meets the needs of their local plumbing code.

Flow rate with restrictor - 1.8 gpm
Flow rate without restrictor - 2.2 gpm

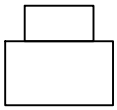

Restrictor

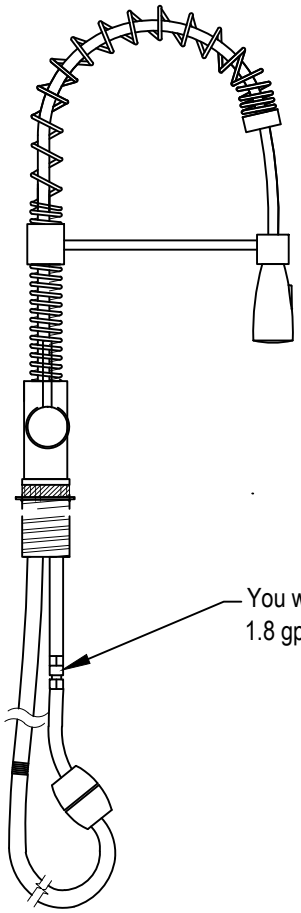

You will find the 1.8 gpm restrictor here. Simply remove the 1.8 gpm restrictor and install the faucet as usual.

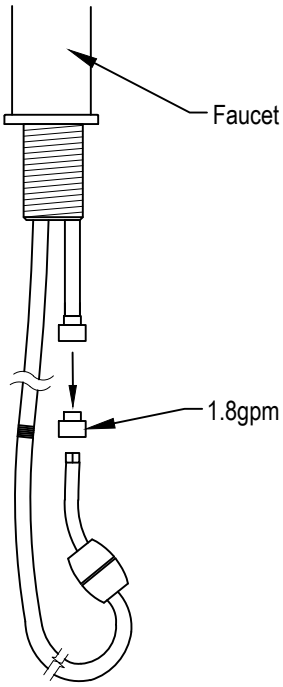

kitchensource.com
1.800.667.8721

VIGO

PACKAGE CONTENTS

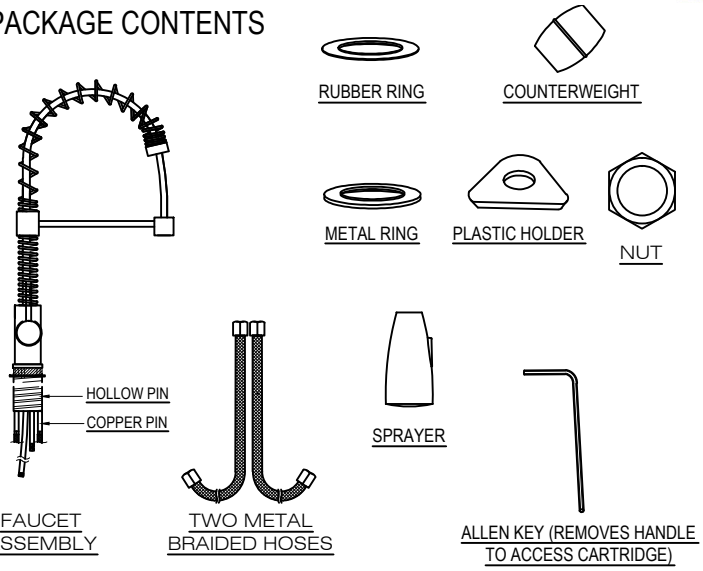

REQUIRED TOOLS

Adjustable wrench
Allen key - supplied (to remove cartridge if needed)
Plumber's putty - optional
Pipe tape
Flat screwdrivers

SAFETY TIPS

If you use soldering for the installation of the faucet, the seats, cartridges and washers will have to be removed before using flame. Damage caused by improper soldering will void the warranty.
Protect your eyes with safety glasses when cutting or soldering water supply lines.

IMPORTANT POINTS

Prior to beginning installation, turn off the cold and hot water lines and open the hot and cold knobs on the old faucet to release pressure.
When installing your new faucet, turn the connector nuts finger-tight, then use one wrench to anchor the fitting and a second wrench to tighten the nut. Connections that are too tight will reduce the integrity of the system and potentially cause product failure which could lead to water damage.
Wrap all threaded connections with pipe tape available at your local hardware or plumbing supply store. Always wrap in a clockwise direction.
Not all necessary supplies to install your faucet are included, however, they are available wherever plumbing supplies are sold.
Prior to installing the faucet please FLUSH THE HOT AND COLD WATER SUPPLY LINES that are or will be connected to the new faucet to remove scale, solder or their impurities which could damage the faucet and potentially void the warranty.

MAINTENANCE

Your new faucet is designed for years of trouble-free performance.
Keep it looking new by cleaning it periodically with a soft cloth. Avoid abrasive cleaners, steel wool and harsh chemicals as these will scratch, dull, and/or damage the finish and void the warranty.

INSTALLATION

Installation must be done by a qualified licensed plumber.
Prior to installation please read the instructions thoroughly, confirm that all parts are included and visually inspect the unit for any defects.
If you have any questions please contact the Vigo Technical Support Department before proceeding with installation.

ASSEMBLY

1. SHUT OFF WATER SUPPLY. REMOVE THE OLD FAUCET AND FLEXIBLE HOSES. CLEAN SINK SURFACE WITH A NON ABRASIVE CLEANER IN PREPARATION FOR THE NEW FAUCET.

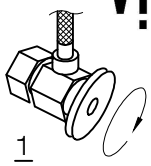

2. THREAD FEMALE END OF METAL BRAIDED HOSE TO THE FAUCET (2).

ENSURE THAT YOU USE PIPE TAPE AND DO NOT OVER TIGHTEN THE SUPPLY LINE NUTS AS THIS COULD CAUSE PRODUCT FAILURE LEADING TO WATER DAMAGE.

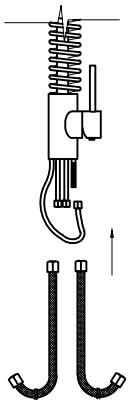

3. POSITION THE FAUCET IN THE COUNTERTOP HOLE, FROM BENEATH THE COUNTERTOP HOLE ASSEMBLE THE PLASTIC HOLDER, RUBBER RING, AND METAL RING IN THE ORDER DEPICTED IN THE DIAGRAM. THEN THREAD METAL NUT ONTO HOLLOW PIN. TIGHTEN THE METAL NUT UNTIL FAUCET IS SECURE.

ENSURE THAT PARTS ARE ASSEMBLED IN THE ORDER AS DEPICTED IN DIAGRAM TO PREVENT DAMAGE TO FAUCET AND SUPPLY LINES.

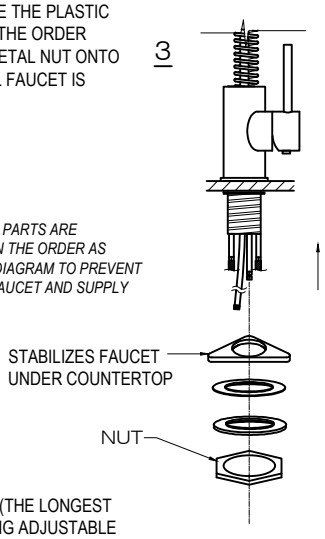

4. SCREW SPRAY HOSE TO THE COPPER PIN (THE LONGEST PIN). MAKE SURE TO HAVE A TIGHT SEAL USING ADJUSTABLE WRENCH. ATTACH SUPPLIED COUNTERWEIGHT TO THE HOSE.

DO NOT OVER TIGHTEN CONNECT POINT AS THIS COULD CAUSE PRODUCT FAILURE LEADING TO WATER DAMAGE

5. (IF NOT DONE ALREADY) ATTACH SPRAYER TO FEMALE CONNECTION OF SPRAYER HOSE BY HAND AND TIGHTEN UNTIL SECURE. MAKE SURE THE BLACK WASHER WITH SCREEN IS SEATED AND INSTALLED PROPERLY.

USE WASHER WITH SCREEN AT CONNECTION POINT BETWEEN SPRAYER AND SPRAYER HOSE. THIS WILL STOP DEBRIS FROM TRAVELING INTO THE SPRAYER HEAD AND EFFECTING ITS FUNCTIONALITY. PLEASE NOTE THAT THE SCREEN WASHER WILL NEED TO BE REMOVED AND CLEANED APPROXIMATELY ONCE EVERY 3 MONTHS TO AVOID BUILD UP AND LOW WATER FLOW.

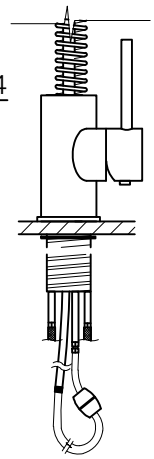

6. ATTACH THE FEMALE CONNECTIONS OF THE FLEXIBLE HOSES TO THE COLD AND HOT WATER SUPPLY .

ENSURE THAT YOU USE PIPE TAPE AND ADJUSTABLE WRENCH, DO NOT OVER TIGHTEN AS THIS COULD CAUSE PRODUCT FAILURE LEADING TO WATER DAMAGE.

7. AFTER INSTALLATION IS COMPLETE, TURN ON THE WATER SUPPLY AND ALLOW BOTH HOT AND COLD WATER TO RUN SEPARATELY FOR AT LEAST TWO MINUTE EACH. WHILE WATER IS RUNNING, CHECK FOR LEAKS. IT IS IMPORTANT TO VIEW THE CONNECTIONS AT THE MALE AND FEMALE FLEXIBLE HOSE CONNECTIONS. IF LEAKS ARE DETECTED, REFER BACK TO THE INSTRUCTIONS AND ADJUST ACCORDINGLY. TIGHTENING NUTS SLIGHTLY MAY STOP ANY MINOR LEAKS.

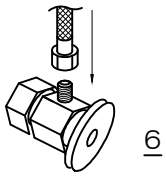

TROUBLESHOOTING

PROBLEM	POTENTIAL CAUSE	CORRECTIVE ACTION
1 - Leaks from handle	1.A - Cartridge unseated 1.B - Cartridge defective	1.A - Remove cartridge from housing, wash thoroughly with hot water and reseat in housing. 1.B - Contact Vigo Technical Support for replacement.
2 - Insufficient flow rate		
3 - Leak at connection points	2.A - Dirty aerator 2.B - Clog in supply hose / line	2.A - Remove and soak / clean with a non abrasive agent (i.e. vinegar). 2.B - Remove sprayer or supply line and flush lines
4 - Loose faucet body		
5 - Sprayer button stops working	3.A - Sprayer hose not tight 3.B - Flexible hose leaking at body or connection point	3.A - Remove sprayer and check integrity of the black washer. Make sure the washer is seated properly and retighten. 3.B - Tighten hoses. If this does not resolve the issue, remove the flexible hose and rethread, checking to make sure the connection is secure. Make sure to use pipe tape.
	4. - Metal nut became loose	4. - From under the counter, use an adjustable wrench and tighten the metal nut to the hollow pipe. Make sure the faucet is perpendicular to the counter.
	5.A - Debris in aerator 5.B - Wear and tear on button	5.A - Remove and clean aerator. 5.B - Contact Vigo Technical Support for replacement.

PARTS LIST - For any parts needed but not shown, please contact Vigo Technical Support

PART T	PART #	FINISH	SUPPLY DATE INDICATOR (INTERNAL USE ONLY)
Pull out Hose (black nylon)	74001	CH, ST	W
Sprayer	74013	CH, ST	W
Handle Lever	78062A	CH, ST	W
Handle Set Screw	78062B	CH, ST	W
Handle Body	78062C	CH, ST	W
Sedal Cartridge	74035	-	W
Metal braided Hose	74020	-	W
Sprayer Washer	74008	-	W
Black Washer with Screw	74010	-	W
Flow Restrictor	78093W	-	W

NSF / ANSI 61

::kitchensource.com
☎ 1.800.667.8721

VIGO INDUSTRIES, LLC ("VIGO")
FAUCET LIMITED LIFETIME WARRANTY

VIGO

EFFECTIVE APRIL 1, 2013

VIGO offers the following limited warranty on each of its Faucet products (the "Product") and the components thereof. This warranty extends only to the original owner for personal household use. For commercial uses, additional limitations apply.

VIGO warrants the structure of the Product to be free from defects in workmanship and materials under normal use and service for the period commencing from the initial date of purchase by the owner, contractor, or builder, from VIGO or an authorized VIGO dealer, through the lifetime of the original owner or end-user.

VIGO warrants the cartridge component of the Product to be free from defects in workmanship and materials under normal use and service for a period of five (5) years from the initial date of purchase by the owner, contractor, or builder, from VIGO or an authorized VIGO dealer.

VIGO warrants the spray assembly and other mechanical components of the Product to be free from defects in workmanship and materials under normal use and service for a period of one (1) year from the initial date of purchase by the owner, contractor, or builder, from VIGO or an authorized VIGO dealer.

Subject to the Warranty Service provision below, any product reported to the authorized dealer or to VIGO as being defective within the warranty period will be repaired or replaced (with a product of equal value) at the option of VIGO. This warranty extends to the original owner and is not transferable to a subsequent owner.

Neither the distributor, authorized VIGO dealer, nor any other person has been authorized to make any affirmation, representation, or warranty other than those contained in this warranty. Any affirmation, representation, or warranty other than those contained in this warranty shall not be enforceable against VIGO or any other person.

VIGO reserves the right to modify this warranty at any time, it being understood that such modifications will not alter the warranty conditions applicable at the time of sale of the products in question.

Limitations

This warranty shall not apply to instances of incorrect operating procedures, breakages, or damages caused by fault through improper installation, carelessness, abuse, misuse, misapplication, improper maintenance, or alteration of the Product, as well as chemical or natural corrosion, accident, fire, flood, an act of God, or any other casualty. Avoid abrasive cleaners, steel wools, and harsh chemicals as these will scratch, damage, and / or dull the product and / or finish and void this warranty. The owner of the Product covered by the present warranty is entirely responsible for its proper installation and any applicable plumbing or electrical wiring. VIGO neither installs nor supervises the installation nor hires a contractor for this purpose; consequently, VIGO cannot be held responsible for any default, breakage, or damages caused thereby or resulting thereof, either directly or indirectly.

The owner must provide access to the components of the Product as described in the installation guide so that VIGO can execute the warranty specified herein. If such access is not available, all expenses to provide said access will be the responsibility of the owner.

This warranty does not apply to Products that have not been installed or operated in accordance with instructions supplied by VIGO and all applicable rules, regulations, and legislation pertaining to such installations.

This warranty does not apply unless the VIGO Product is installed by fully insured licensed professionals. Vigo strongly recommends that such licensed professionals have experience in the installation of bathroom and kitchen products. [Installation of certain products, including without limitation glass products (i.e., shower doors and glass sinks) by an inexperienced person may result in product failure including, but not limited to, glass breakage which could result in personal injury or death.]

VIGO is not liable for personal injuries or deaths to any persons or for any direct, special, incidental, or consequential damage, loss of time, loss of profits, inconvenience, incidental expenses, labor or material charges, or any other costs resulting from the use of the product or equipment or pertaining to the application of the present warranty, or resulting from the removal or replacement of any product or element or part covered by this warranty.

EXCEPT AS OTHERWISE PROVIDED ABOVE, VIGO MAKES NO WARRANTIES, EXPRESSED OR IMPLIED, INCLUDING WARRANTIES OF MERCHANTABILITY AND FITNESS FOR A PARTICULAR PURPOSE OR COMPLIANCE WITH ANY CODE.

In any case, VIGO cannot be held liable for any amount over and above the purchase price paid for the Product by the owner/end-user, contractor, or builder.

Commercial Limitations

In addition to the above conditions and limitations, the warranty period for products installed for commercial applications or used in commercial ventures is one (1) year from the initial date of purchase by the owner, contractor, or builder from an authorized dealer. VIGO is not responsible for loss of use or profit under any circumstances. If the product is used as a display, the warranty period begins from the date of purchase. This warranty gives the owner specific legal rights. The owner may also have other rights which can vary from one state or province to another.

Warranty Service

In order to obtain service provided under this warranty during regular business hours, contact the dealer or distributor who sold the unit, or contact VIGO directly. VIGO will provide the warranty service described above when the following conditions have been met: the failure is of the nature or type covered by the warranty; the user has informed an authorized VIGO Agent or VIGO's warranty service department representative of the nature of the problem during the warranty period; conclusive evidence (e.g., proof of purchase or installation) is provided to the foregoing by the user proving that the failure occurred or was discovered within the warranty period; an authorized independent service person or company representative has been permitted to inspect the product during regular business hours within a reasonable time after the problem was reported by the user. Vigo's warranty obligation shall be discharged upon tender of replacement or repair. The customer's refusal to accept the tender terminates VIGO's warranty obligations.

Certification may be ended by VIGO or certification agencies without notice.