AB3618HS

36" Smooth Single Bowl Fireclay Farm Sink

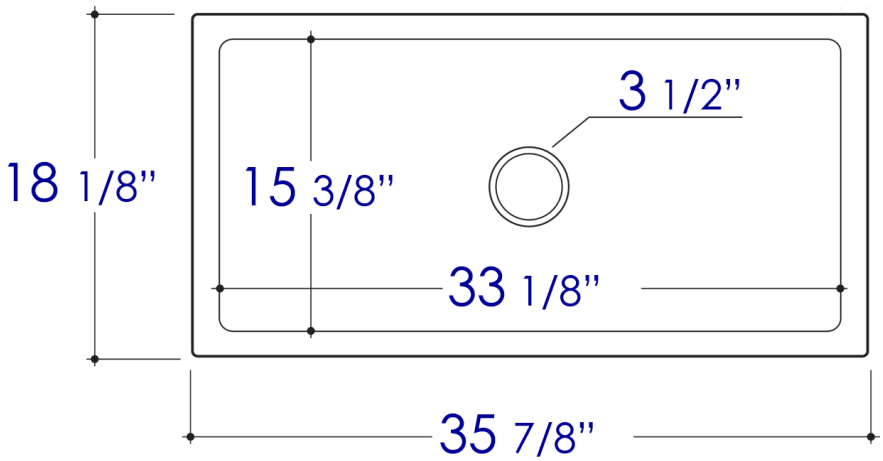

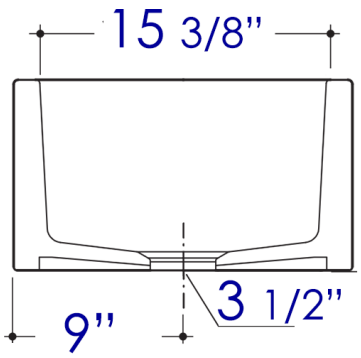

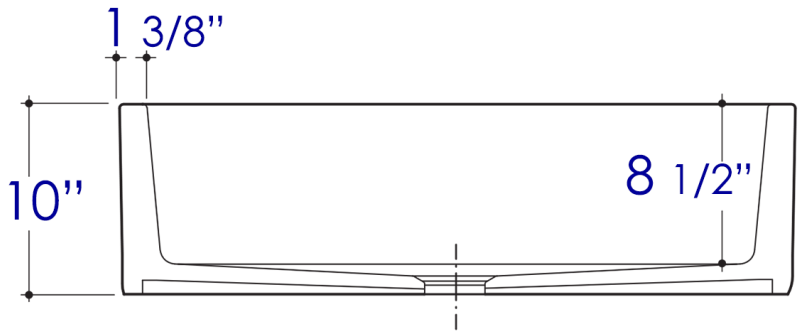

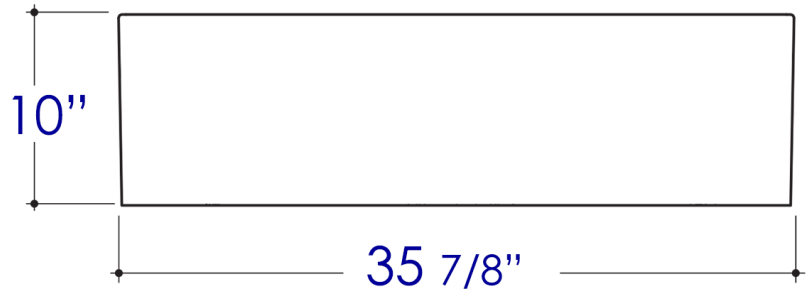

kitchensource.com
1.800.667.8721

®2017 ALFI brand™ All Rights Reserved. This material may not be reproduced, displayed, modified or distributed without the express prior written permission of the copyright holder.