Kräus®

INSTALLATION MANUAL

Oletto™ Single Lever Pull Out Kitchen Faucet

KPF-2610

::kitchensource.com
☎ 1.800.667.8721

Prior to Installation:

- Make sure you have all necessary parts by checking the diagram and parts list. If any part is missing or damaged, please contact Customer Service

- Turn off the hot and cold water supply at the angle stops and turn on the old faucet to release any built up pressure. Remove existing faucet. Clean sink or countertop to remove any debris, plumber's putty, or silicone
- Place bucket under angle stops. Turn on to flush any debris prior to installing new plumbing. Shut off angle stops
- Pre-drilled hole size requirement: 1-3/8" (min) – 1-1/2" (max)
- Max countertop thickness without deck plate: 1-1/2"
- Max countertop thickness with deck plate: 1"
- 1, 2, or 3 hole installation

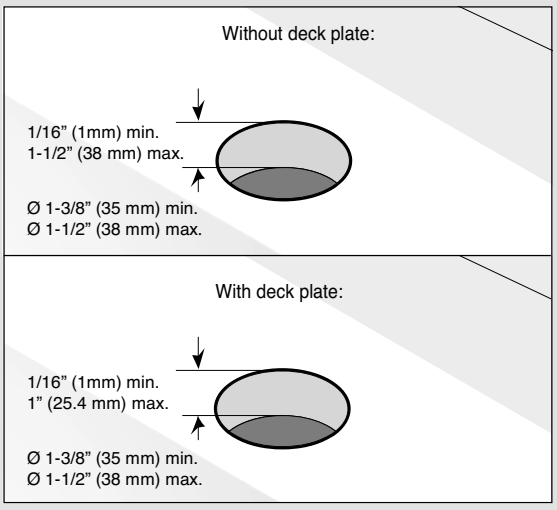

Tools you will need:

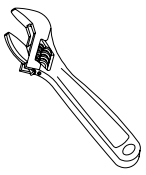

Adjustable Wrench

Safety Goggles

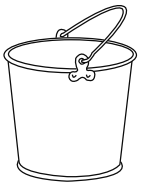

Bucket

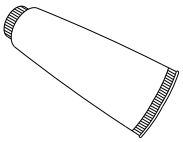

Silicone Sealant

::kitchensource.com
☎ 1.800.667.8721

Diagram and Parts List

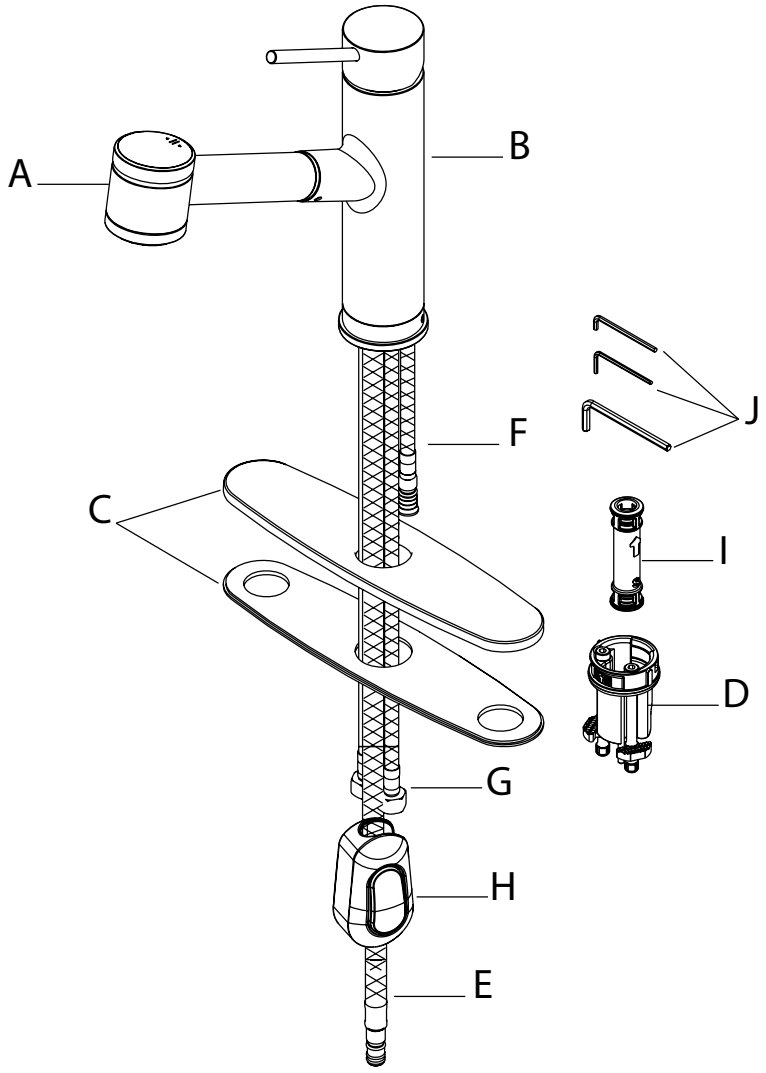

A. Spray Head
B. Faucet Body
C. Deck & Putty Plate
D. Base
E. Spray Hose
F. Supply Hose
G. Hot & Cold Waterlines
H. Weight
I. Quick Connect
J. Hex Wrench Set
J1. 2mm
J2. 2.5mm
J3. 4mm

::kitchensource.com
☎ 1.800.667.8721

Faucet Dimensions

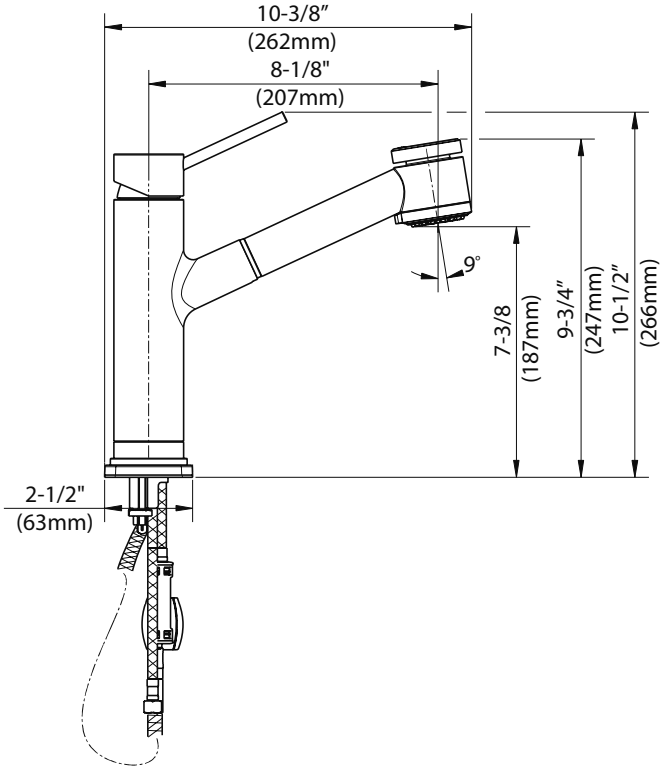

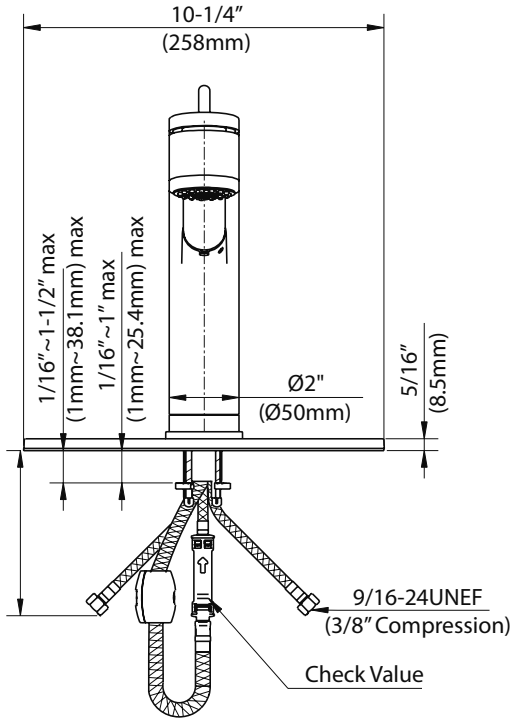

Step 1A: Install base without deck & putty plate

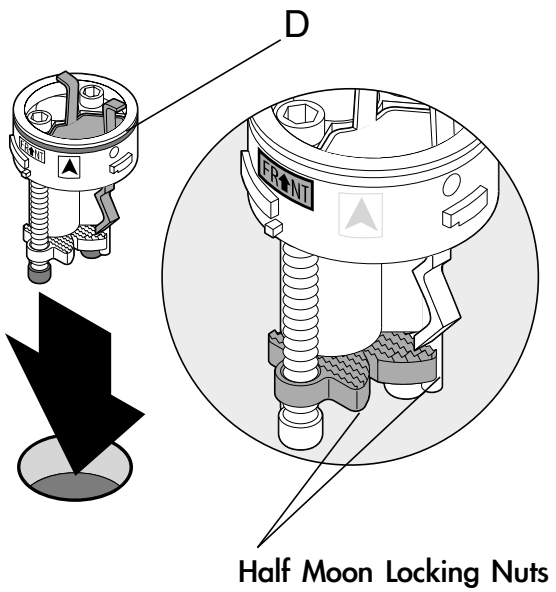

Insert base (D) into sink or countertop with "FR↑NT" facing forward. Tighten screws on base (D) with 4mm hex wrench (J) until base is secure on sink or countertop

Installer Tip: Rotate the two half-moon shaped locking nuts inward before inserting base (D) into sink or countertop

Step 1B: Install base with deck & putty plate

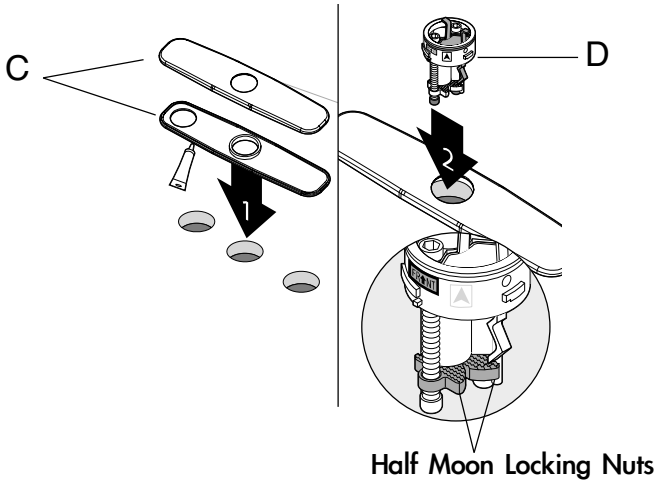

Place a bead of clear silicone sealant (not included) around the edge of the putty plate (C). Secure deck & putty plate (C) on sink or countertop. Insert base (D) into hole of deck & putty plate (C) with "FR↑NT"facing forward. Tighten screws on base (D) with 4mm hex wrench (J) until base is secure on deck & putty plate (C)

Installer Tip: Rotate the two half-moon shaped locking nuts inward before inserting base (D) into deck plate (C)

Step 2: Install faucet

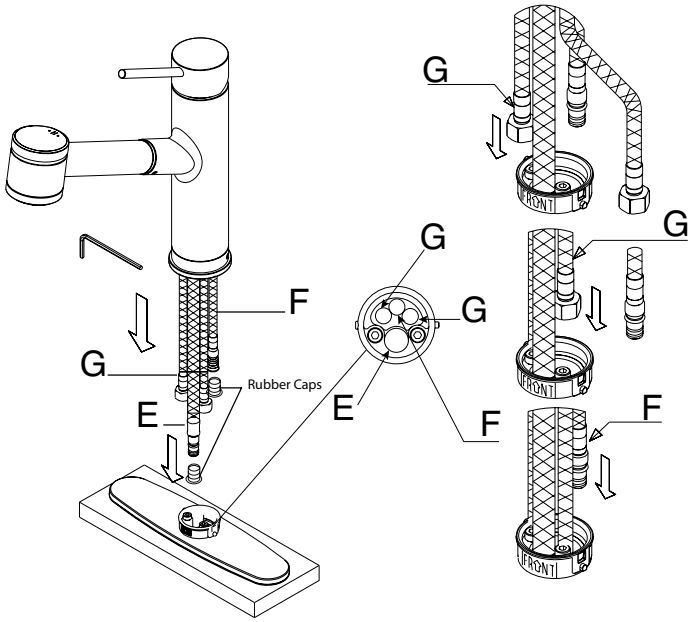

Insert spray hose (E) into small hole of base (D). Insert hot & cold waterlines (G) and supply hose (F), one by one, in large hole of base

Installer Tip: Please remove rubber caps for spray hose (E) and supply hose (F) prior to inserting into base

Installer Tip: To remove Quick Connect (I), push housing upward, hold firmly, and pull downward

Step 3: Secure faucet

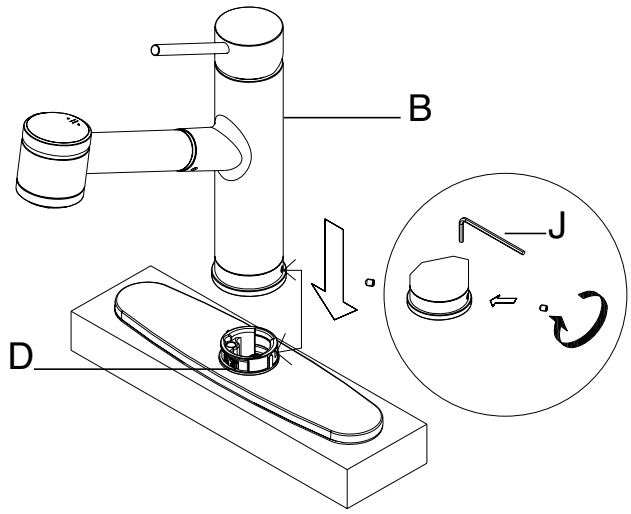

Align arrow on faucet body (B) with arrow on base (D). Attach faucet body (B) to base (D). Secure faucet body (B) by tightening the set screw with 2.5mm hex wrench (J)

Installer Tip: Please loosen set screw from faucet body (B) prior to securing to base (D)

Step 4: Connect waterlines to main valve

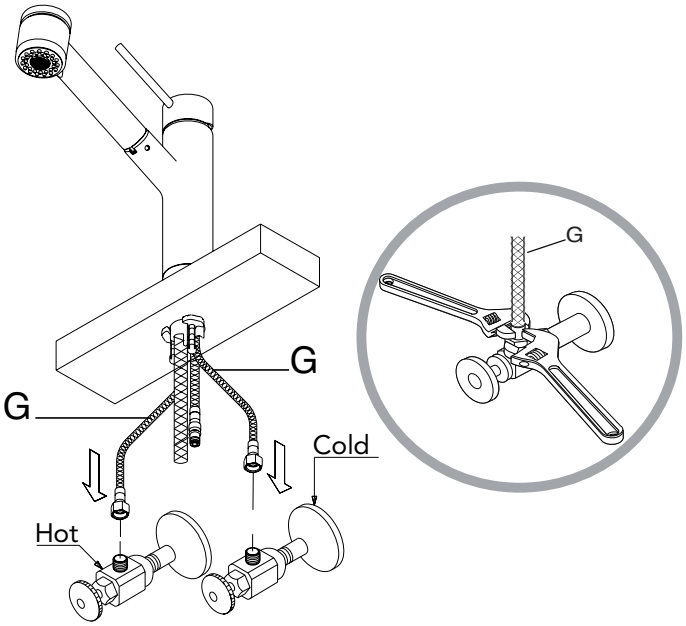

Thread hot & cold waterlines (G) onto angle
stops. Tighten with adjustable wrench until
snug. Turn on the angle stops and check for leaks
(DO NOT TURN FAUCET ON)

Installer Tip: Use two wrenches when securing waterlines to angle stops to prevent kinking, as shown in picture

Step 5: Connect quick connect

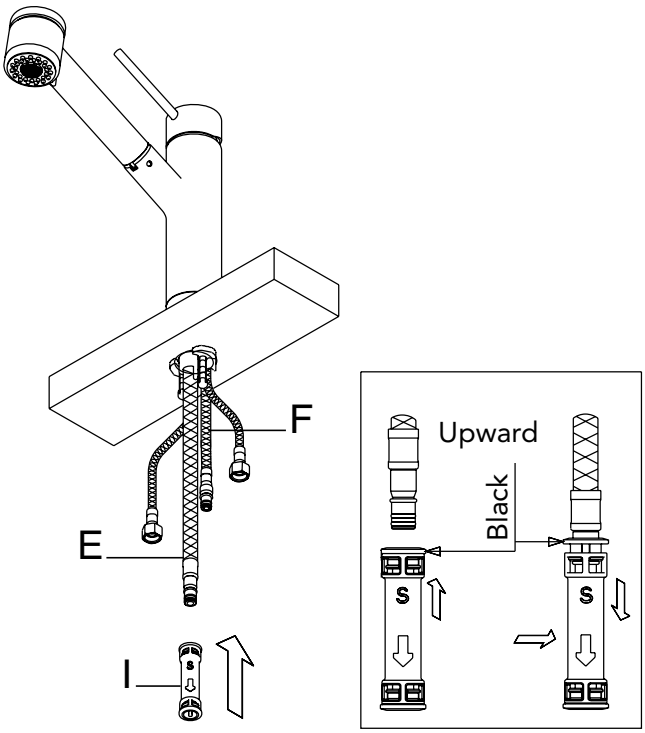

Attach Quick Connect (I) with black end onto spray hose (E) until you hear a click. Attach the other end onto the supply hose (F)

Installer Tip: Tug on the spray hose (E) moderately to ensure both connections are secure

Step6: Install weight

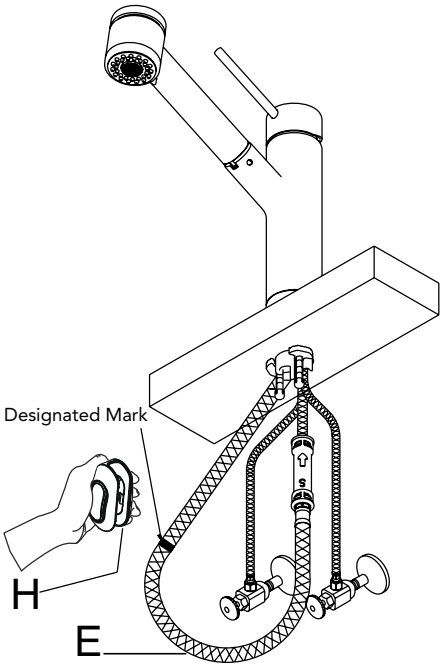

Attach weight (H) on the designated mark on the spray hose (E)

Step 7: Flush faucet

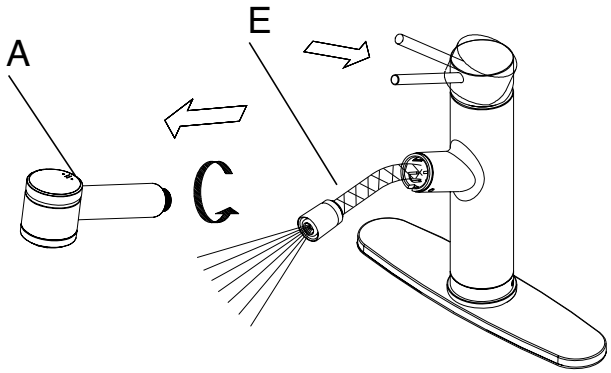

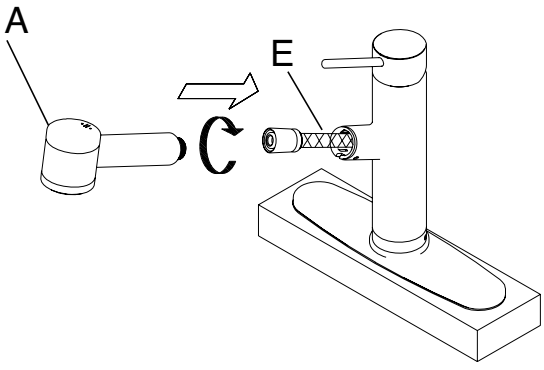

Remove spray head (A). Hold tip of spray hose (E). Turn faucet on for 1 minute to flush any debris. Reconnect spray head (A)

::kitchensource.com
☎ 1.800.667.8721

Replacement Part List

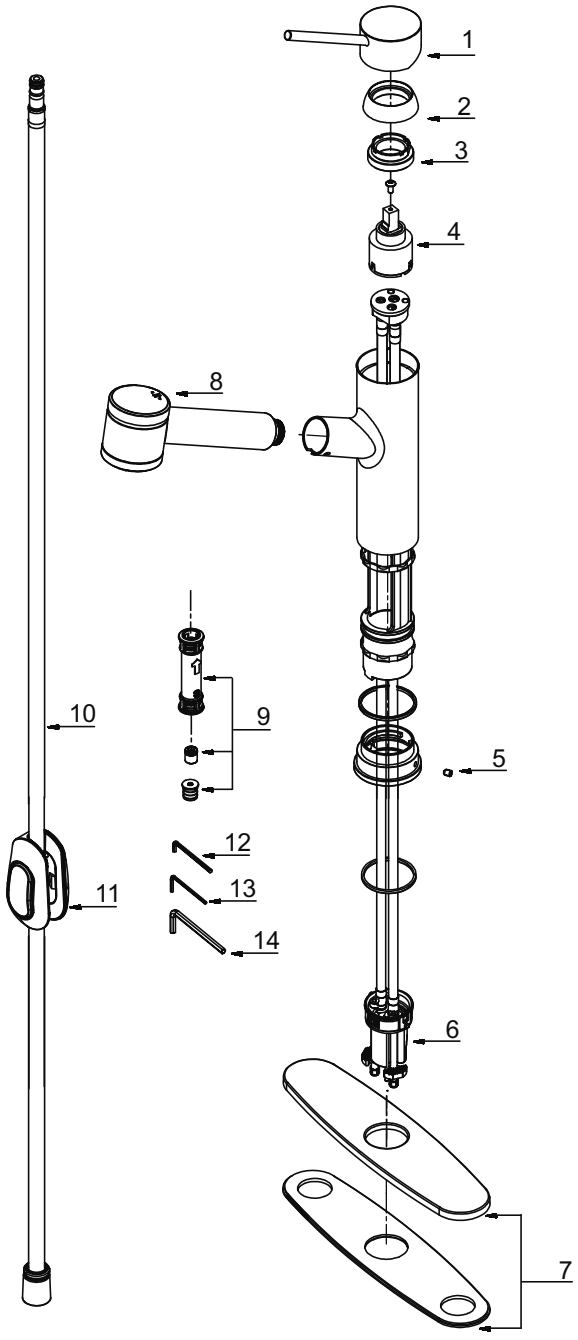

1. Metal Assembly Handle
2. Cartridge Cover
3. Locking Nut
4. Cartridge
5. Set Screw
6. Base
7. Cover & Putty Plate
8. Spray Head
9. Quick Connect
10. Spray Hose
11. Weight
12. Hex Wrench 2.5mm
13. Hex Wrench 2mm
14. Hex Wrench 4mm

::kitchensource.com
☎ 1.800.667.8721

Trouble - Shooting

If you have followed the instructions carefully and your faucet still does not work properly, take the following corrective steps:

PROBLEM	CAUSE	ACTION
Leakage under the handle	Locking nut (3) has come loose	Unscrew joystick from handle (1). Loosen set screw with a hex wrench (13). Remove metal handle (1). Unscrew cartridge cover (2) by hand only. Tighten locking nut (3) with an adjustable wrench
Leaking from spray hose	Quick Connect (9) may be installed incorrectly	Remove Quick Connect (9) from spray hose (10) and reinstall. Make sure you hear a click when you install it on the spray hose (10)
Water will not shut off completely	Cartridge (4) may need to be adjusted or replaced	Unscrew joystick from handle (1). Loosen set screw with a hex wrench (13). Remove metal handle (1). Unscrew cartridge cover (2) by hand only. Remove locking nut (3) with an adjustable wrench. Remove ceramic disc cartridge (4). Check for cracks

Trouble - Shooting

If you have followed the instructions carefully and your faucet still does not work properly, take the following corrective steps:

PROBLEM	CAUSE	ACTION
Hose does not retract	Weight (11) may be installed incorrectly	Readjust weight (11) on the hose (10). Make sure it is installed on the designated mark on the hose (11)
Low Flow	Quick Connect (9) may be clogged with debris	Remove Quick Connect (9) from hoses. Soak in 50/50 solution of warm water and vinegar for 5 minutes, then reinstall

::kitchensource.com
☎ 1.800.667.8721

Care & Maintenance

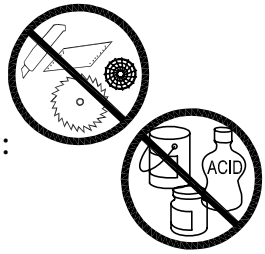

*To keep the product clean & shining, follow the steps below:

1. Rinse with clean water & dry with a soft cloth
2. Do not clean with soaps, acid, polish, abrasives, or harsh cleaners
3. Do not use cloth with a coarse surface
4. Unscrew the aerator and clean when necessary

*This installation manual is subject to change without further notice.

::kitchensource.com
1.800.667.8721

Codes/Standards Applicable:

NSF/ANSI Standard 61 certified by IAPMO
NSF/ANSI Standard 372 certified by IAPMO

GREEN
Water Efficiency

LEAD FREE
TM

Meets ASME A112.18.1M/A112.18.1
1.75GPM 6.6L/min maximum

HELP LINE

In requesting warranty service, please be ready to provide:

1. Proof of purchase.
2. A description of the problem.

::kitchensource.com
1.800.667.8721