AIR EXCHANGER USER MANUAL

READ AND SAVE THESE INSTRUCTIONS

WARNING! - TO REDUCE THE RISK OF ELECTRIC SHOCK, OR INJURY TO PERSONS, OBSERVE THE FOLLOWING:

a) Use this unit only in the manner intended by the manufacturer. If you have questions, contact the manufacturer.

b) Always unplug the unit when performing maintenance work!

CAUTION! FOR GENERAL VENTILATING USE ONLY. DO NOT USE TO EXHAUST HAZARDOUS OR EXPLOSIVE MATERIALS AND VAPORS.

Address of your installer

1 OPERATIONAL PRINCIPLES

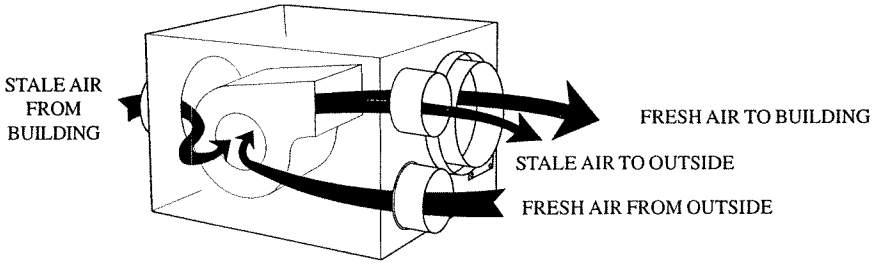

The air exchanger is designed to eliminate problems of excessive humidity in the heating season. The air exchanger carries out the following operations:

CIRCULATION WITH AIR EXCHANGE:
While continually circulating the air within the house, the unit also evacuates part of the stale air and replaces it with fresh dry air from the outside.
The following benefits are thus obtained: lowering of the humidity and elimination of stale air.

FILTRATION:
When the air flows through the system, a mechanical filter traps dust particles.

2 HOW TO OPERATE THE UNIT

Important! *If both exhaust and distribution ducts of your air exchanger are connected to the furnace you must make sure that the furnace blower runs continuously when the unit is in operation.*
Note: if your air exchanger is equipped with the optional humidity control dial or other remote control device refer to section 2.2 for operation instructions

2.1 Houses With No Remote Control.

Set the 3-position switch located on the unit at:

- "**LOW SPEED**" for normal daily operation in the winter.
- "**HIGH SPEED**" during fall and spring and when excess pollutants or humidity are present (parties, odors, smoke, etc.)
- "**REMOTE**"

  when you are away from the house for a few days.

  when you deem the inside air too dry.

  just before unplugging the unit for maintenance or servicing.

  WARNING! You must always UNPLUG the unit when you want to definately turn it OFF.

2.2 Houses With a Humidity Control Dial:

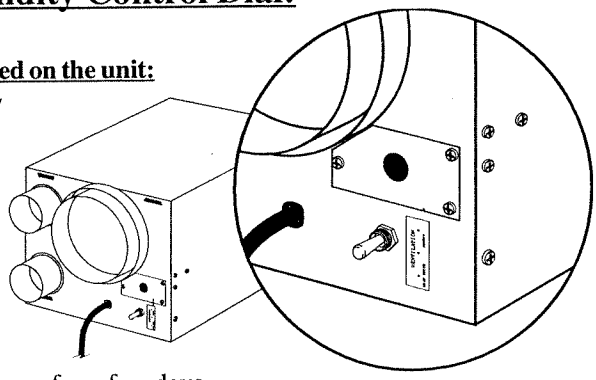

Setting the 3-position switch located on the unit:

- "**LOW SPEED**"for normal daily operation in the winter, spring and fall.
- "**HIGH SPEED**" for excess pollutants (parties, odors, smoke, etc.)
- "**REMOTE**"

  -during the summer

  -when you are away from the house for a few days.

  -when you deem the inside air too dry.

  -just before unplugging the unit for maintenance or servicing.

  WARNING! You must always UNPLUG the unit when you want to definately turn it OFF. When in REMOTE, the high speed can still be turned on by a remote control.

Setting the humidity control dial:

Setting the humidity dial correctly will assure that the unit will automatically switch to high speed whenever the humidity level in the house becomes too high. The main advantage is the prevention of condensation on the windows in winter.

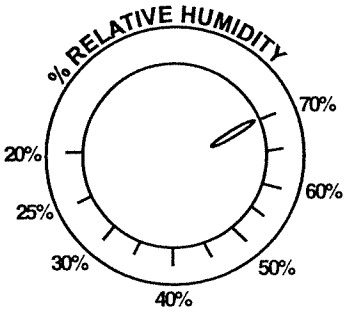

* *appearance may vary*

Summer:

Turn the dial to the highest humidity setting.

Fall, Winter and Spring:

Turn the dial to the desired humidity level. The opposite table lists relative humidity settings recommended for various outside temperatures.

Outside Temperature	Recommended Humidity Level
50°F	55%
32°F	45%
14°F	35%
-4°F	30%

Keep in mind that these recommendations are based on the average household and that ventilation needs vary from one house to another (depending on cooking habits, frequency of showers, washing, window construction, etc.). If you observe persistant condensation on your windows you might try dial settings that are slightly lower than the ones in the table above.

CAUTION: Do not go lower than 30%: the air will become too dry for human comfort.

3 MAINTENANCE

Caution! Risk of Electrical shock! Always unplug the unit when performing maintenance work!

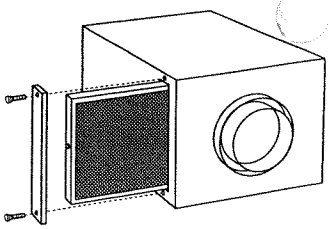

Air filter: Clean filter once ***every three months***. First, use a vacuum cleaner to remove the accumulated dust. Then wash it in warm soapy water. You may add liquid bleach if you wish to disinfect (one tablespoon per gallon).
Exterior openings: Clean the exterior intake and exhaust screens at least ***once a year***, preferably in fall.

4 WARNING

- You must **turn off** your unit and **unplug** it in the following situations: major renovation work, house building, sanding of gypsum joints or varnishing. These activities create dust or vapors which may damage your unit.

- **During heavy snow storms**, the unit should also be turned off to avoid problems caused by snow entering the unit.

5 TROUBLESHOOTING

PROBLEM	POSSIBLE CAUSES	SOLUTIONS
Air too dry.	Control settings are incorrect.	• Adjust the wall control according to section 2.2. • Do not turn the dial lower than 35%. • Adjust to LOW SPEED.
Persistant condensation on windows	• Control settings are incorrect. • The house is not heated enough. • Air cannot circulate close to windows. • Hot tubs or pools present. • Too much fire wood in the house. • Window pane too cold.	• Adjust the wall control according to section 2.2 and give the unit time to respond. • Turn on the central heating system. Keep the thermostat adjusted to over 64°F. • Do not completely close curtains, blinds, etc. • Cover these sources of humidity. • Do not keep more than 2 cords of wood in the house or store the wood outside.
Air from distribution register too cold.	Too much air is passing through this register.	• Adjust to LOW SPEED. • Make sure the stale air exhaust hood outside the house is not blocked.

INSTALLER MANUAL

AIR EXCHANGER

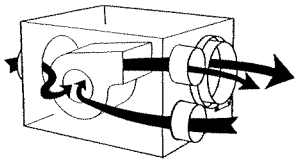

READ AND SAVE THESE INSTRUCTIONS

Warnings

Always unplug the unit from 120 volts before making any connections. Failure to disconnect the power supply could result in electrical shock or damage of the electronic module inside the unit.

CAUTION: For General Ventilating Use Only. Do Not Use To Exhaust Hazardous Or Explosive Materials And Vapors.

Make sure that the wires don't short circuit between themselves.

Keep the remote control low voltage wires at least one foot away from large inductive loads such as motors, line starters, lightning ballasts, light dimming circuits and power distribution panel. Do not rout the remote control wires along with building power wiring.

When cutting or drilling into wall or ceiling, do not damage electrical wiring and other hidden utilities.

Avoid poor wiring connections.

Field wiring must comply with applicable codes, ordinnances and regulations.

Always unplug power supply cord before cleaning or servicing this unit.

This unit must be grounded.

The motor is permanently lubricated. Do not oil or disassemble the motor.

1 DUCT INSTALLATION:

Do not install the unit in an attic nor in any room with an ambiant temperature under 50°F.

Three installation methods are possible:

1.1 Fully ducted System

For homes with more than one level, locate the exhaust register at the highest level.

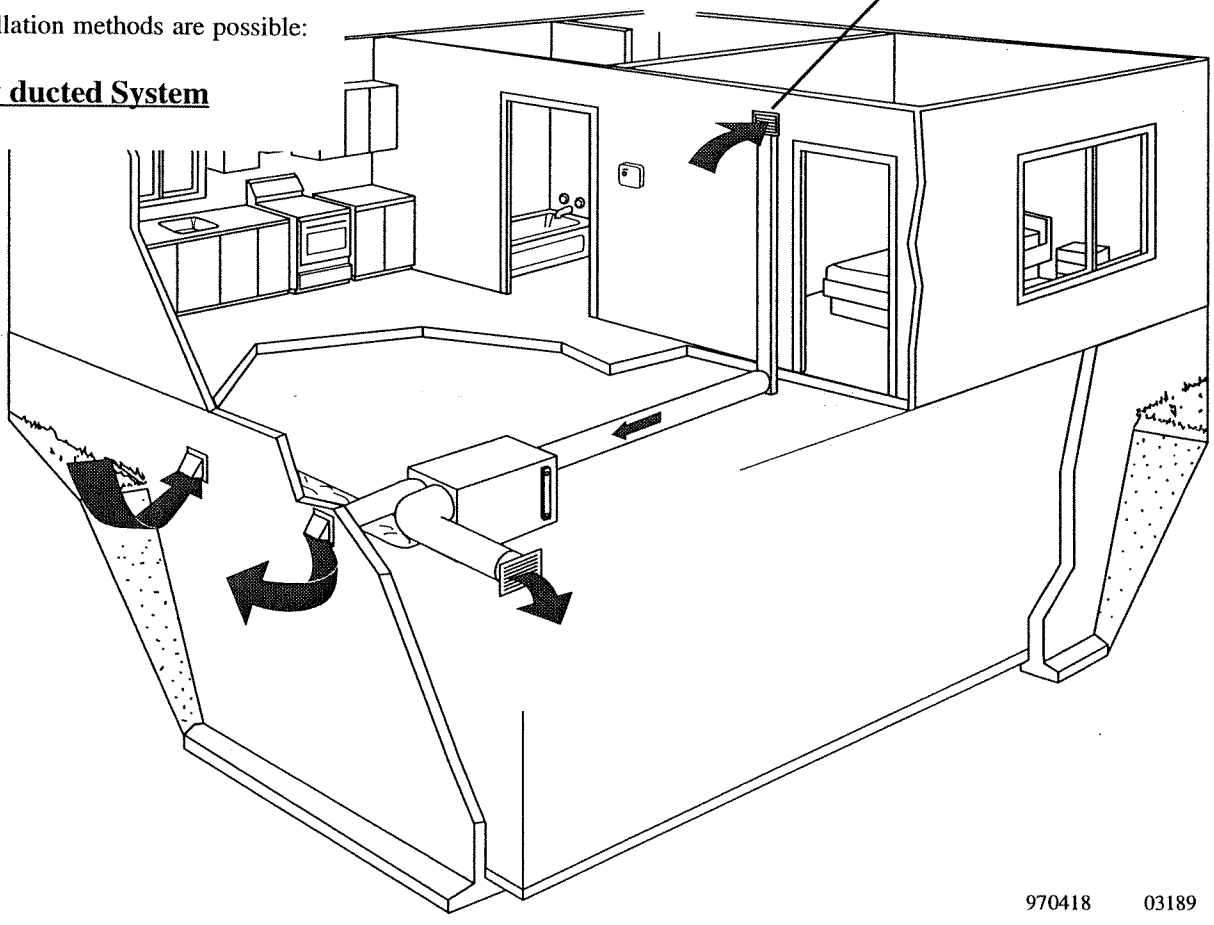

1.2 Dedicated Exhaust Duct

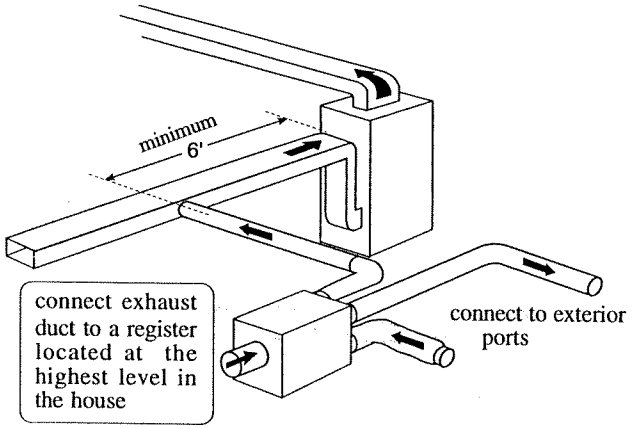

1.3 Simplified Installation

For this type of installation, the **furnace blower must run continuously** when the air exchanger is in operation.

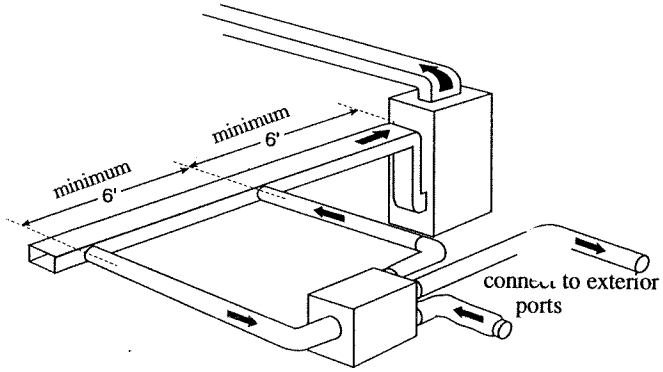

2 DUCT SIZE AND LENGTH

Use a 4"ϕ insulated duct to connect the unit to the exterior intake hood. (Maximum length: 12 feet.)

Use a 4"ϕ non-insulated duct to connect the unit to the exterior exhaust hood. (Maximum length: 12 feet.)

Use 6"ϕ duct for the 2 larger ports on the unit. (Maximim total length, in and out: 35 feet.)

3 MOUNTING THE UNIT

Screw the 4 hooks to the 4 corners of the unit. Attach the 4 chains to the ceiling joists. Put the springs on the chains. Suspend the unit as illustrated. It is very important that the unit be level.

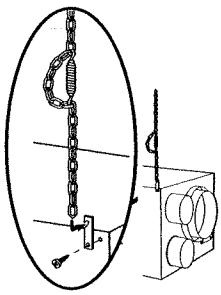

Position the unit so as to permit easy access to the filter. Install the unit upside down if this will facilitate access to the filter.

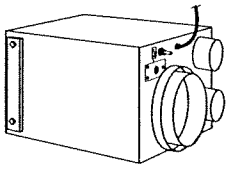

4 INSTALLING THE EXTERIOR HOODS:

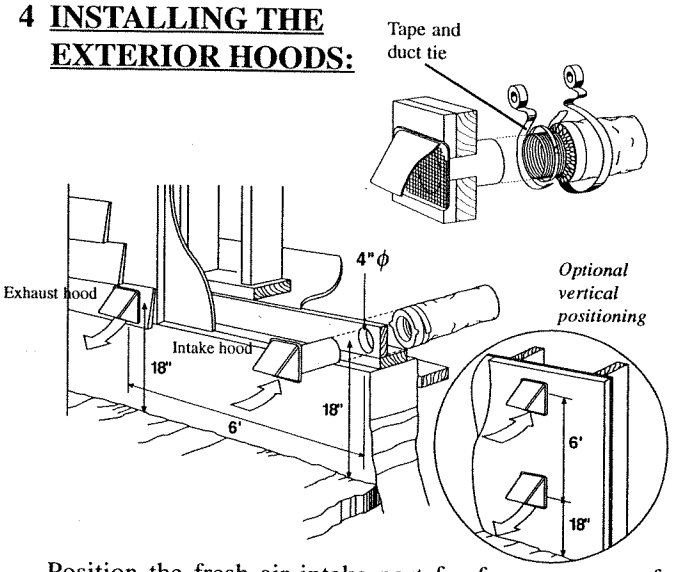

Position the fresh air intake port far from sources of contamination such as the garage, garbage bin, dryer exhaust, central vacuum vent, gas meter exhaust, gas barbecue-grill.

Place the openings at least 18 inches above the ground.

Leave at least 6 feet between the two openings.

Place sticker "FRESH AIR INTAKE", provided in installation kit, on corresponding hood.

5 ELECTRICAL CONNECTION OF THE REMOTE CONTROL (OPTIONAL):

Caution! Risk of electrical shock! Unplug the unit before making connections!

Unscrew the metal plate near the toggle switch on the unit in order to have access to the electrical compartment. Insert the remote control wires through the strain relief bushing. Connect the wires as shown.

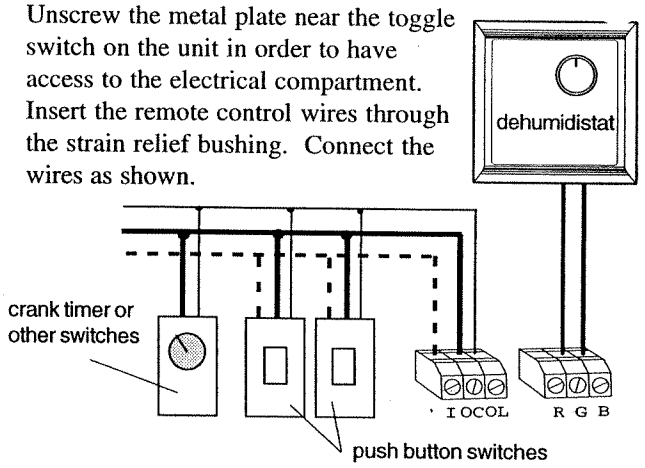

Plug in the unit and check the 6 control scenarios in the table below (if remote control is a dehumidistat):

	Set Toggle Switch to	Set Humidity Control Dial to	**Results expected** Fan Speed
1	REMOTE	maximum counter-clockwise	motor off
2	REMOTE	maximum clockwise	high speed
3	LOW SPEED	maximum counter-clockwise	low speed
4	LOW SPEED	maximum clockwise	high speed
5	HIGH SPEED	maximum counter-clockwise	high speed
6	HIGH SPEED	maximum clockwise	high speed

CONNECTION DIAGRAM

ATTENZIONE: Togliere l'alimentazione prima di accedere alle parti elettriche.

ATTENTION: Avant d'accéder aux parties électriques, il faut couper le courant.

WARNING: Beware power is off before touching electrical components.

ACHTUNG: Vor Berührung der Schaltgeräte Stromzüfurung unterbrechen.

ATENCION: Quitar la corriente antes de manipular los materiales eléctricos.

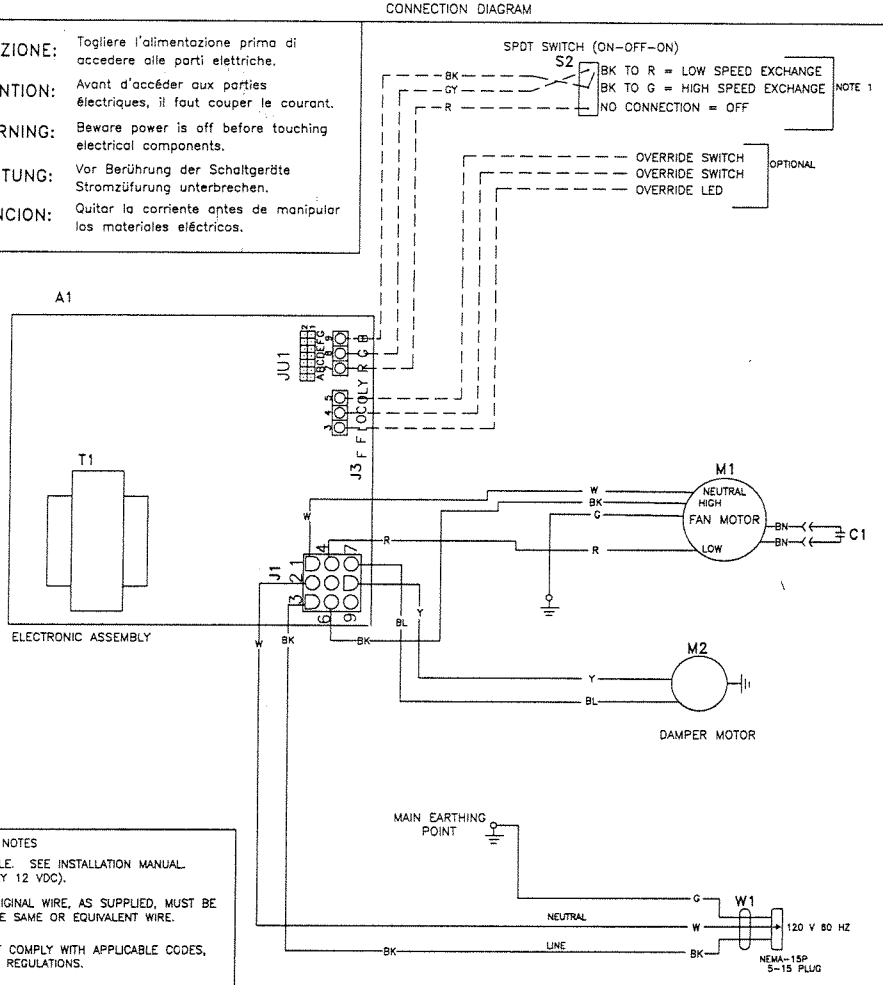

NOTES

1 – CONTROLS AVAILABLE. SEE INSTALLATION MANUAL. (LOW VOLTAGE ONLY 12 VDC).

2 – IF ANY OF THE ORIGINAL WIRE, AS SUPPLIED, MUST BE REPLACED, USE THE SAME OR EQUIVALENT WIRE.

3 – FIELD WIRING MUST COMPLY WITH APPLICABLE CODES, ORDINNANCES, AND REGULATIONS.

LINE VOLTAGE
LOW VOLTAGE AND FIELD WIRE

COLOR CODE			
R	RED	BK	BLACK
V	VIOLET	BL	BLUE
W	WHITE	GY	GREY
Y	YELLOW	O	ORANGE
BN	BROWN	G	GREEN
NC	NO CONNECTION		

LOGIC DIAGRAM

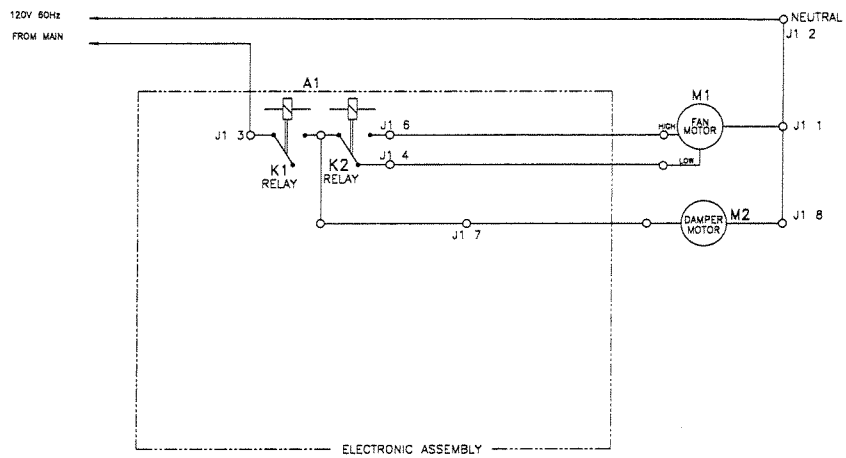

JU1

JUMPERS TABLE	JU1A	JU1B	JU1C	JU1D	JU1E	JU1F	JU1G	MODEL TYPE
	OUT	OUT	OUT	OUT	OUT	OUT	OUT	AE60 41005

FUNCTION TABLE A	RELAY	
MODE	K1	K2
Intermittent	0	0
Exchange Low	1	0
Exchange High	1	1
Off	0	0

0 = Relay coil is de–energized

1 = Relay coil is energized

NS = Not supported

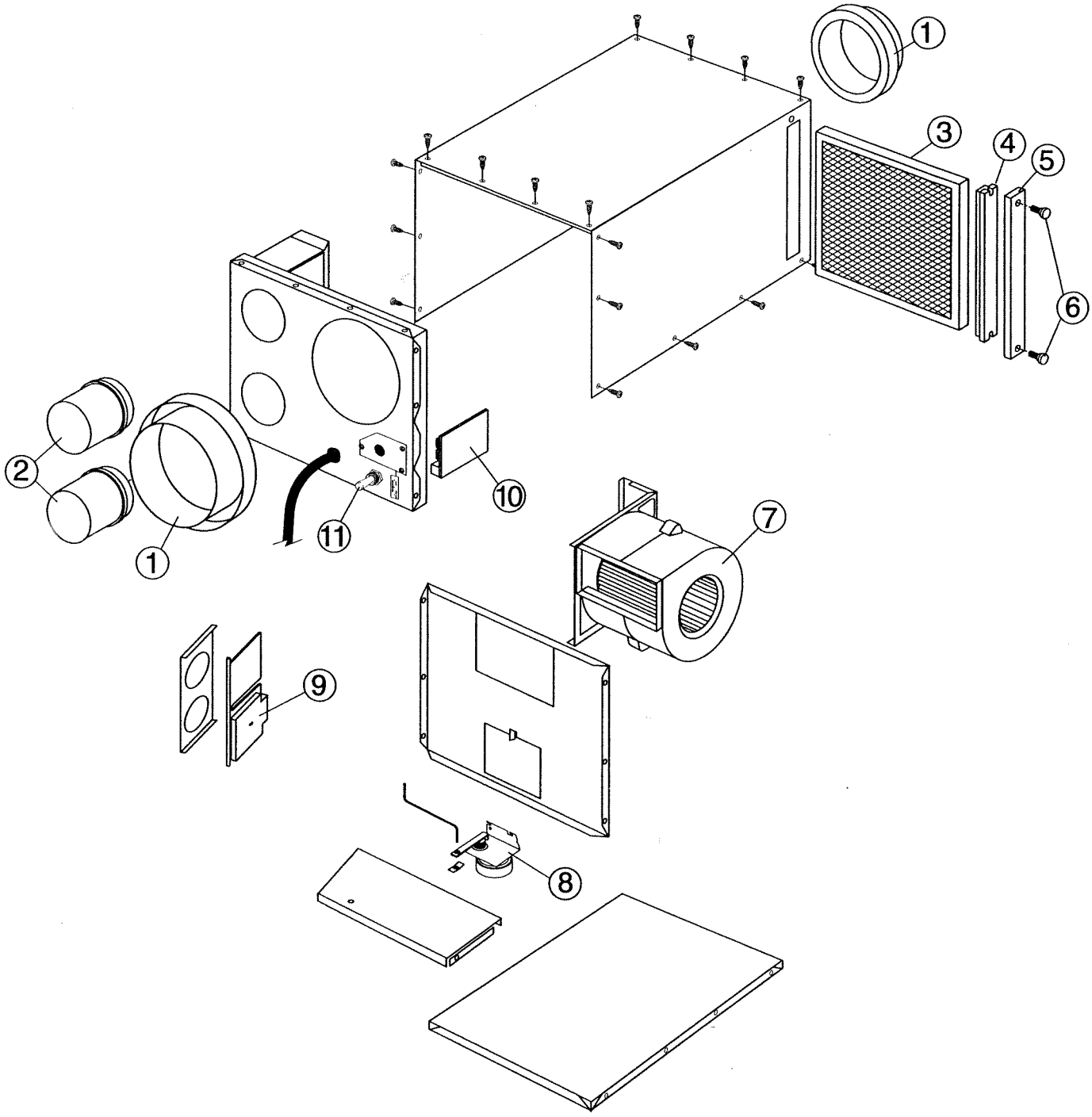

AIR EXCHANGER - PARTS ORDERING CHART		
Number on drawing	Description	Part number
1	6" ϕ double collar port #2	00866
2	4" ϕ port, black	01335
3	Filter 10.7750 x 13.55 x 0.875"	11197
4	Styrofoam filter door	00531
5	Filter door cover, black	01334
6	Nylon bolts 8-32 x ¾"	00615
7	Fan assembly	11608
8	Damper actuator assembly	00477
9	Double damper 4.375 x 9.875"	00730
10	Electronic board	02169
11	Toggle switch	12885
	Installation kit	00842