kitchensource.com
1.800.667.8721

smart slide full | Power

Drawer Systems

2022.03

KNAPE & VOGT
POWERED BY samet

Smart Slide Single and Full Extension Options

Smart Slide Drawer Systems meet expectations for advanced design creation with full and single extension options, which are developed with the purpose of meeting various design needs.

Smooth and Silent Movement

Smart Slide Full is engineered to be functional for any drawers. Smart Slide full extension allows you freedom in furniture design such as Day & Night furniture's, bathroom cabinet and also kitchen applications.

Due to special production method with low tolerances, Smart Slide Full operates smooth and effortlessly all the time. Nonstop Synchronization, provided by silicone wheel, ensures smooth and silent running action with lifetime durability.

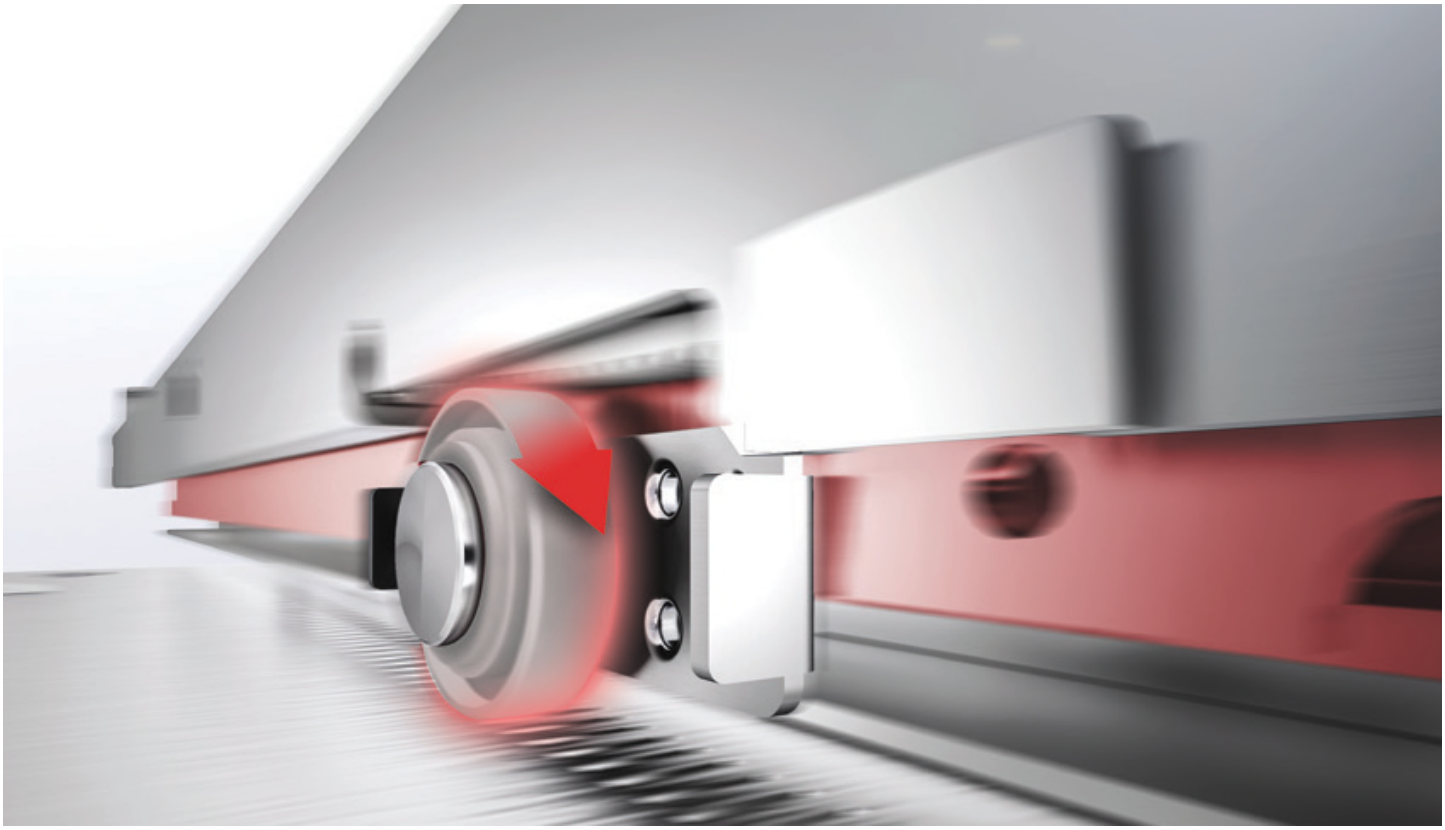

Lock-Fix Mechanism

Lock-Fix mechanism was especially designed for the quick and flexible installation process of Smart Slide Drawer Systems.

With wide drawer size alternatives within a range of 250 mm to 600 mm, different requirements can be met, which ensures different solutions during furniture production. The possibility to lock as tight as desired ensures safety during drawer utilization.

Full Extension Soft Close with Adaptive Damping

Soft - Close Version

The new integrated soft close system ensures gentle and quiet closing.

Thanks to adaptive soft close technology, drawers can be closed softly with same smooth closing effect even if you change the load inside the drawer.

Drawer and Cabinet Dimensions S-C

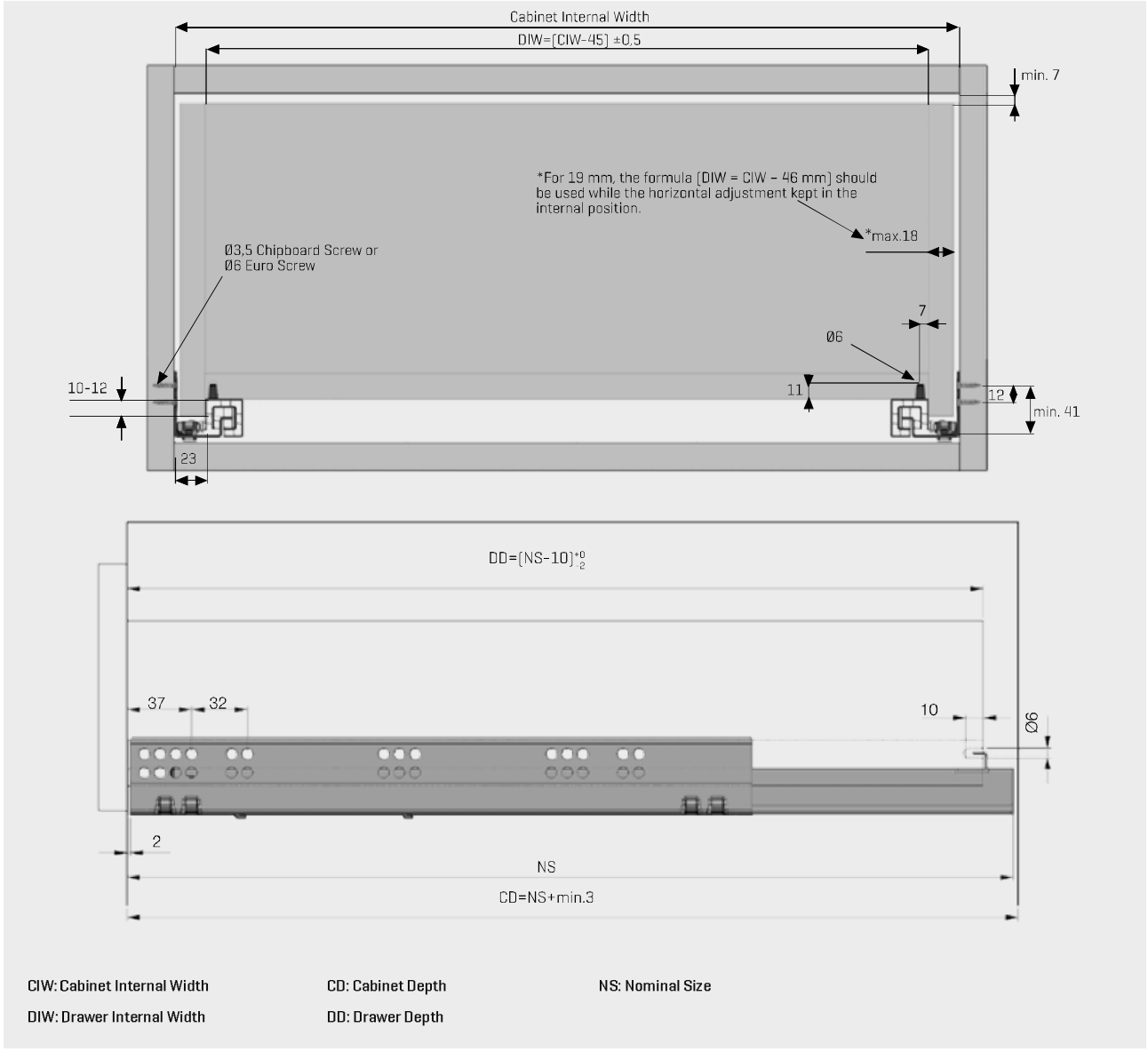

CIW: Cabinet Internal Width
DIW: Drawer Internal Width
CD: Cabinet Depth
DD: Drawer Depth
NS: Nominal Size

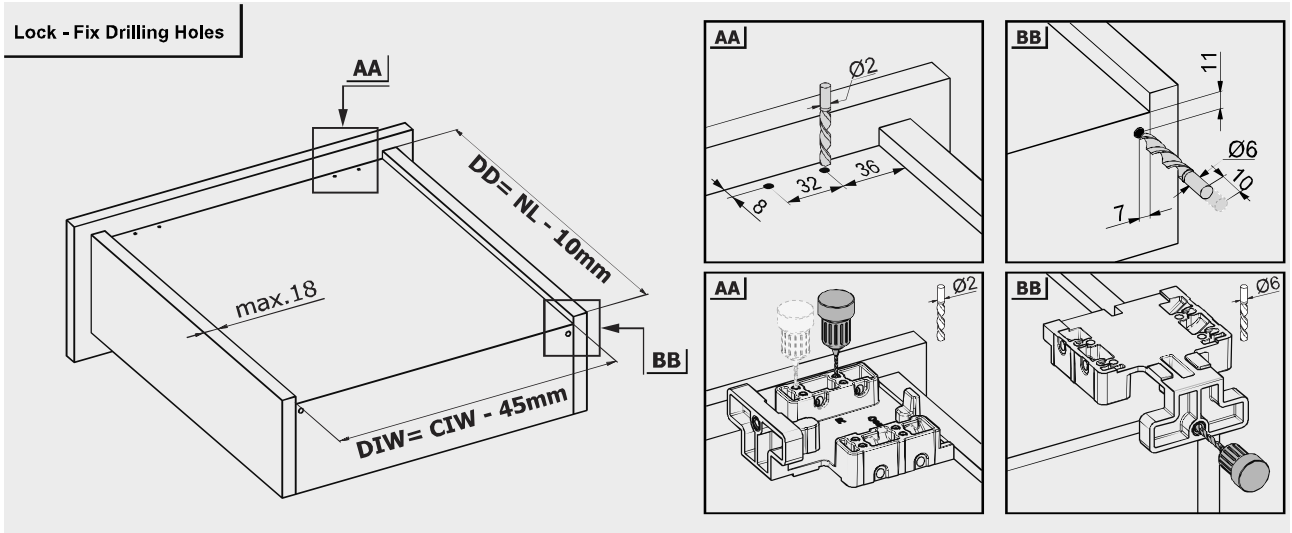

LOCK - FIX ASSEMBLY INSTRUCTIONS

1

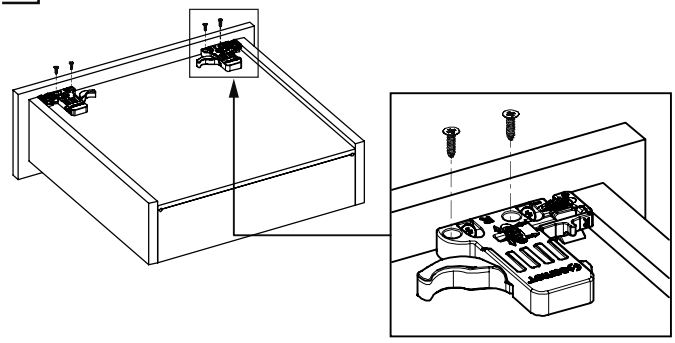

Note: Use angled holes to mount smart lock when wooden floor width is selected less then 12 mm.

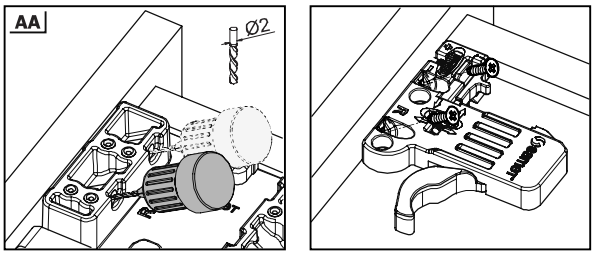

2

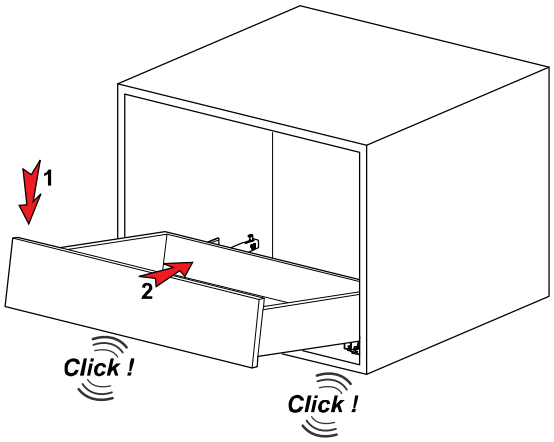

3

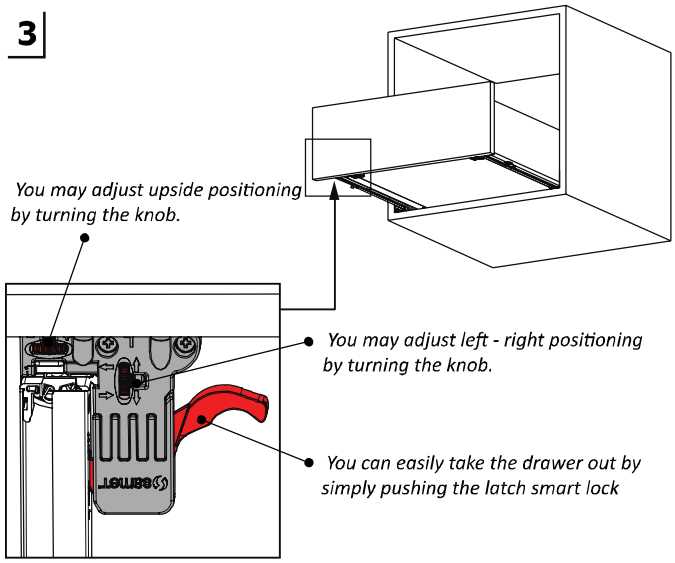

Screw Location for the Slides

Screw the slide from marked holes.

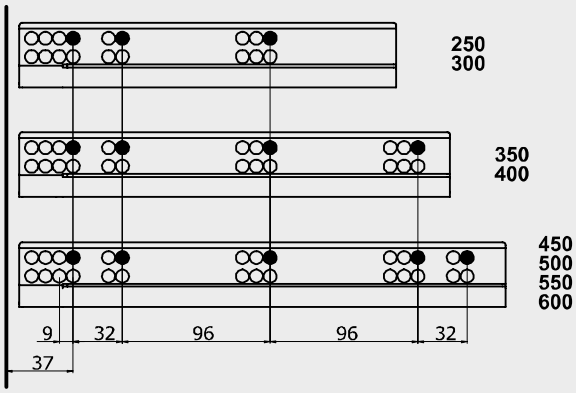

CD	Cabinet Depth
CIW	Cabinet Internal Width
NS	Nominal Size
DIW	Drawer Internal Width
DD	Drawer Depth

* All dimensions in the diagram are in mm

Recommended Screws For Rail Assembly for Assembly	
Ø3,5x16 mm Chipboard Screw	
Ø6,1x11,5 mm Euro Screw	

smart slide full | Power

Drawer Systems

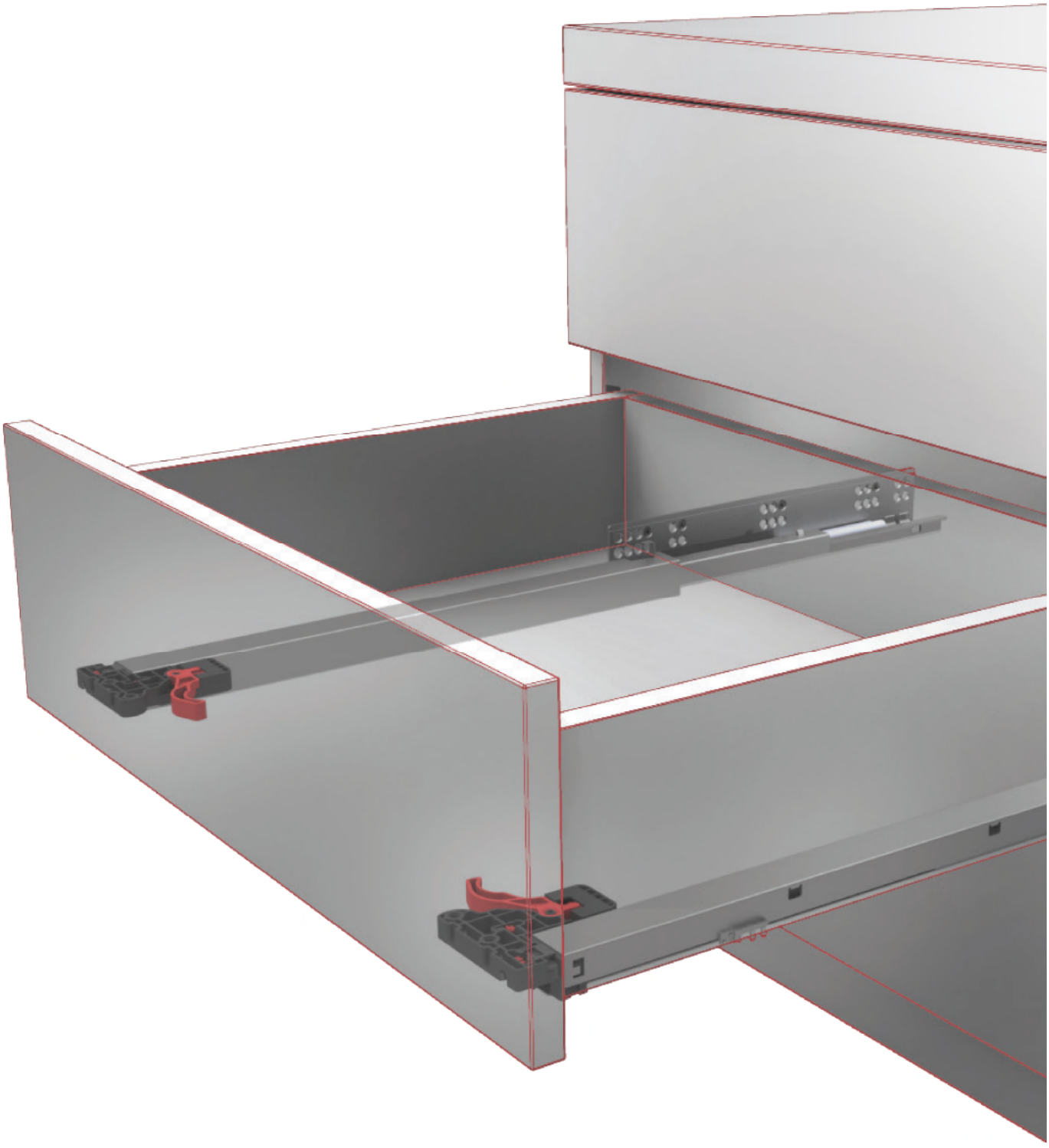

Knape & Vogt reserves the right to change product specifications at any time without notice.

KV and the KV logo are trademarks of Knape & Vogt Manufacturing Company.

©2022 Knape & Vogt Manufacturing Company.

kitchensource.com
1.800.667.8721

30.03.2022
OL3226

KNAPE & VOGT®

POWERED BY samet™

www.kv.com

Search Knape and Vogt on
your favorite social media sites