LED 2086 LED 2092
LED 3086 LED 3092

833.72.450	833.72.474	833.75.174
833.72.451	833.72.475	833.75.175
	833.72.476	833.75.176
	833.72.477	833.75.177

12 V System / 24 V System	K	W	mm	T_A	~ / =
833.72.474	2700 K	3.4 W	Ø 61.2 x 15.6	-20 °C – +45 °C -4 °F – +113 °F	Loox **12 V**
833.72.475	3000 K				
833.72.476	4000 K				
833.72.477	5000 K				
833.72.450	2700-5000 K				
833.75.174	2700 K				Loox **24 V**
833.75.175	3000 K				
833.75.176	4000 K				
833.75.177	5000 K				
833.72.451	2700-5000 K				

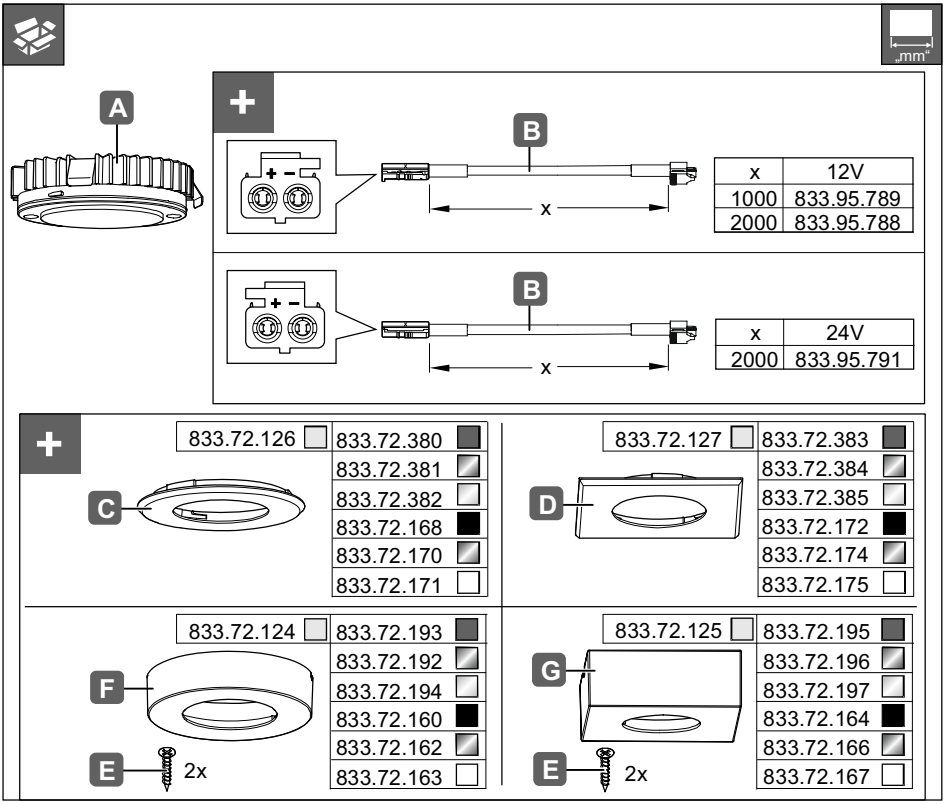

732.28.329

HDE 04.02.2021

::kitchensource.com
☎ 1.800.667.8721

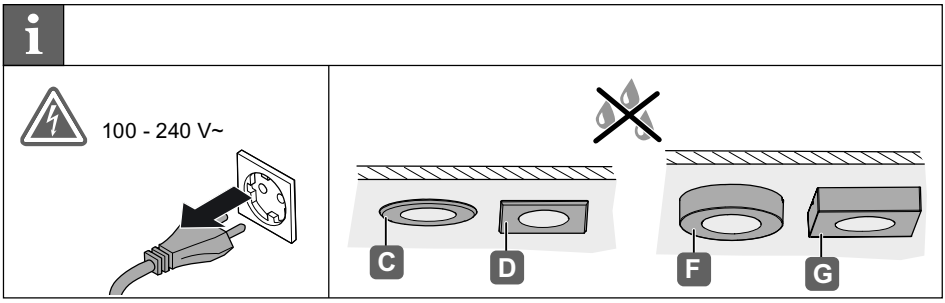

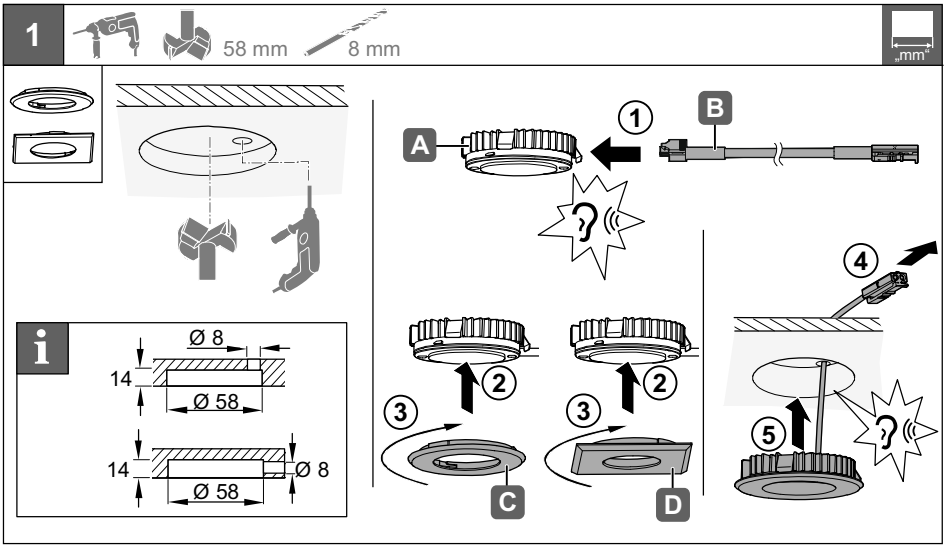

732.28.329

HDE 04.02.2021

::kitchensource.com
☎ 1.800.667.8721

1

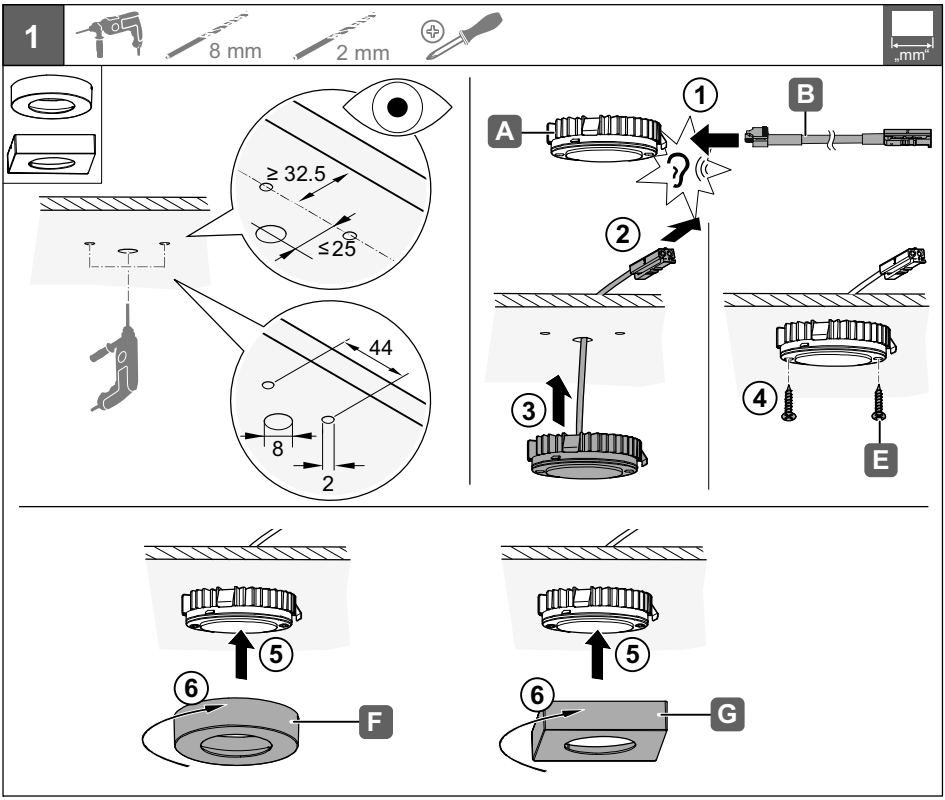
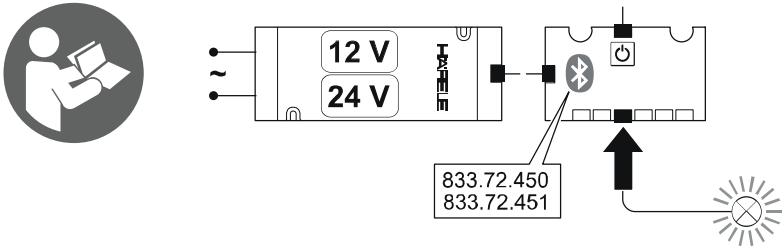
2