Imperial

Kitchen Ventilation

Deluxe Economy & Economy
1900D Series
1900E / ENV Series

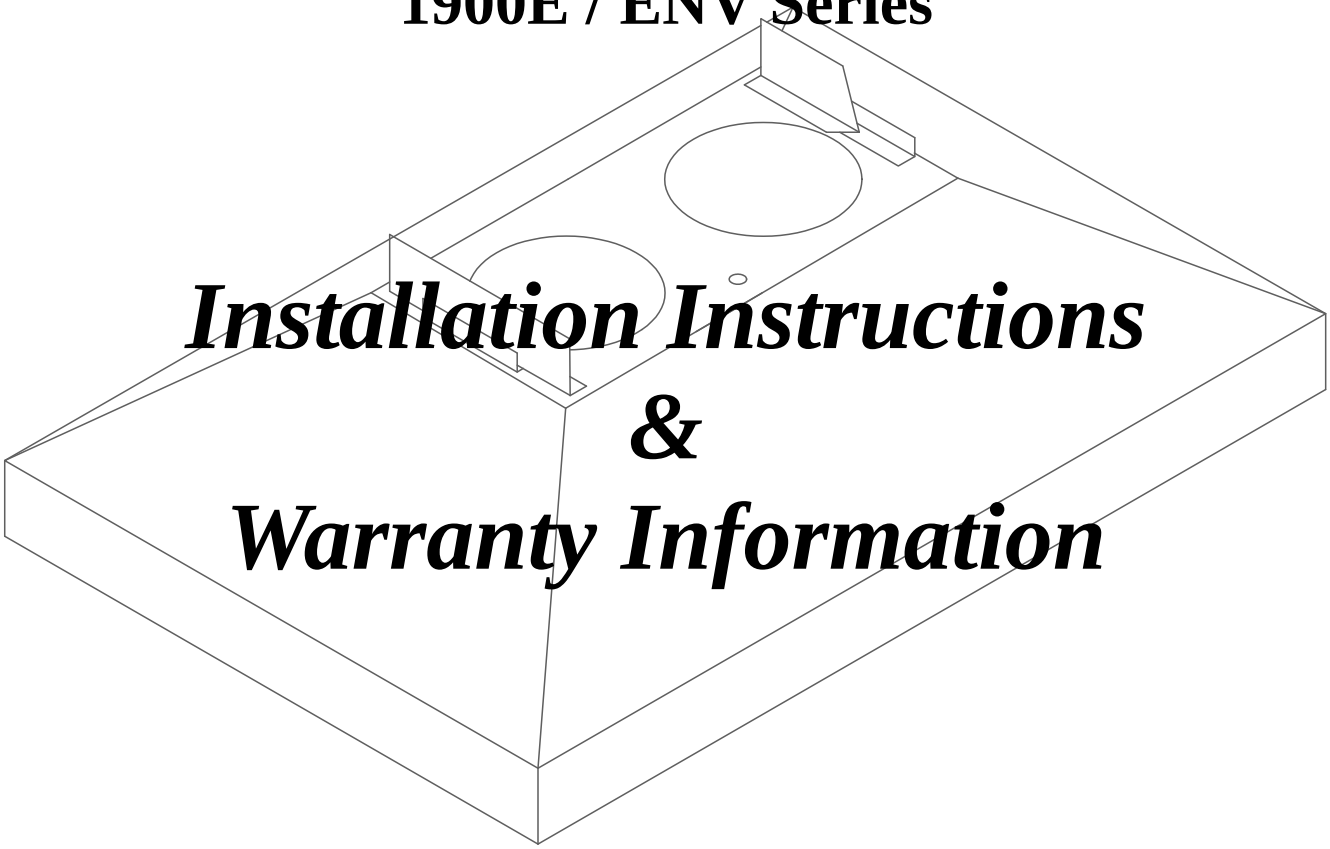

Installation Instructions
&
Warranty Information

::kitchensource.com
☎ 1.800.667.8721

Read Before Starting Installation!

Inspect your range hood prior to installing!
Any cosmetic defects must be reported to us prior to installation.
Once this hood is installed, ICP will NOT accept any responsibility
for any cosmetic blemishes, scratches or dents in the Canopy.
Save all original packaging if you wish to return for any reason!

FIRST:
Check your local building and electrical codes.

WARNING:
To reduce the risk of fire or electrical shock, Do Not use any two speed motor units with a Solid State control devise.

CAUTION:
To reduce the risk of fire or personal injury and to properly exhaust air, be sure to duct air to the outside. **DO NOT** vent exhaust air into spaces within wall, attics, ceilings, crawl spaces or garages. When venting to the outside make duct run as short and straight as possible. Avoid using elbows if at all possible. If elbows are used, we recommend that the first elbow is 24" from vent opening on the hood (minimum of 12")and at least 24" between it and the next elbow. We strongly recommend no more then two 90 degree elbows in any duct run.
No Performance Warranty when used above BBQ Style Grills.

DO NOT use duct pipe smaller than the outlet duct opening on the hood, this will reduce performance and void the warranty. **DO NOT** use flex ducting. Also, use either a Roof Cap or Wall Cap to end run. Be sure that all joints are taped securely in place.
It is essential to have the proper distance between the bottom of the range hood and the cooking surface below. In most cases the cooking appliance manufacturers specifications will establish the fire safe minimum distance required, although there are other factors to consider:

- Local Building Codes
- Cross directional air movements ie: open windows, air conditioning/heating outlets, cooling fans, etc.
- Overall size of the cooking appliance and surrounding countertop surfaces.
- Range hood model selected.

***REDUCING duct size will VOID Warranty.**

Minimum distance between cooking surface and the bottom of the hood is 30" and 36" is the maximum distance. Keep in mind, increasing the distance will decrease the performance.

Economy Series Installation Details:

CABINET: Be sure that the cabinet bottom is level, side to side and front to rear.
For the Vented Unit (1900E) you will need to cut an 8” x 8” hole in the bottom of the cabinet, 3/4” in from the rear wall and on center line. For the Non-Vented model (1900ENV) there is no need for a duct pipe cut out. Shelves and top to be cut to clear 7” round pipe to line up with the bottom cabinet cut out.
Also, cut holes for electrical wires for both Vented and Non-Vented.

ELECTRICAL: Stub enough wire into cabinet to reach in front of vent pipe. Enter cabinet 3 1/4” left of center and 1 1/2” from wall for vented and non-vented units. Remove splice box cover before mounting hood.

NOTE: Be sure to remove black electrical tape that holds the damper blades closed.

MOUNTING: Insert canopy below the cabinet, being sure your vent opening and electrical cut outs line up with cabinet cut outs. Use the Key Hole mounting holes to secure the canopy. After hood is mounted attach house wires to leads in the hood. Secure locknut to conduit and check wiring for compliance to local building codes.

FINISH: Replace splice box cover. Connect duct and tape all joints. Replace Filter.

WARNING:
To reduce the risk of fire or electrical shock DO NOT use the “E” series with any solid-state speed control device.

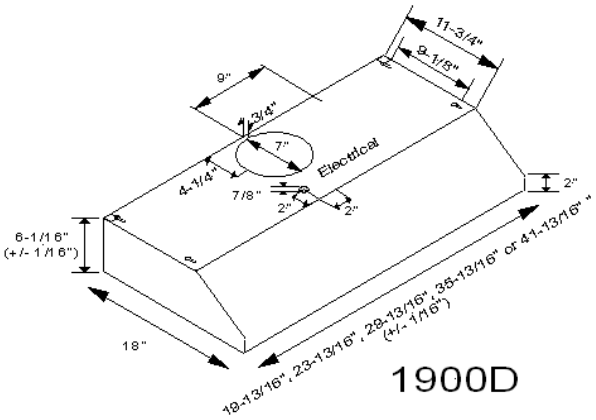

1900E

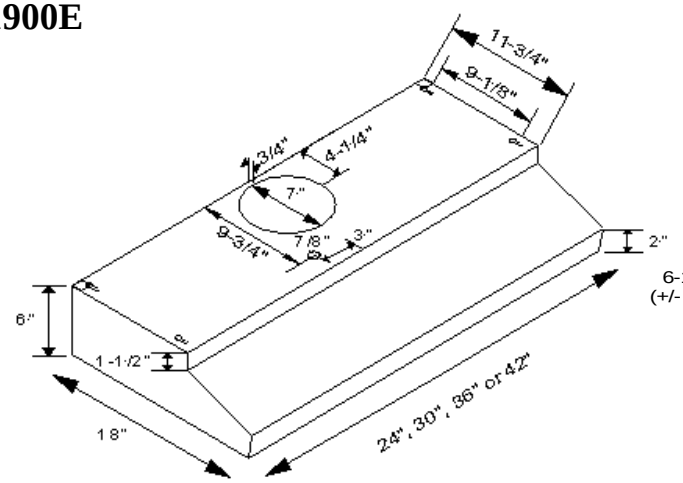

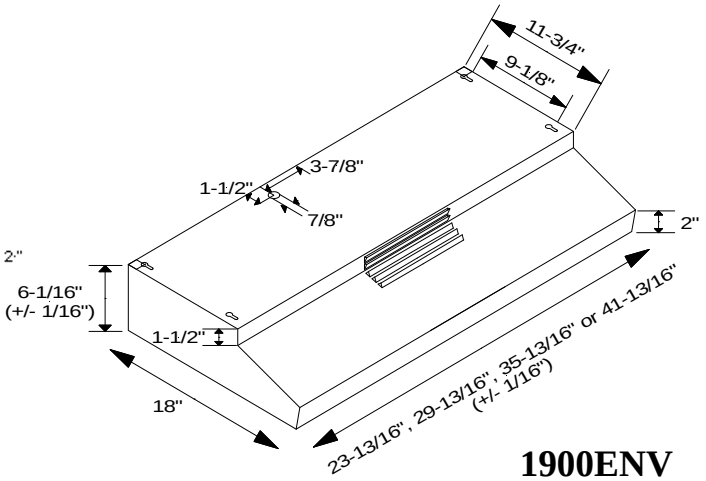

1900ENV

::kitchensource.com
☎ 1.800.667.8721

PARTS:

When ordering Parts we need the following information:

- Model Number (not serial number) found on UL label inside hood.
- Exact dimensions (in the case of filters)

You can find the model number on the inside of your hood on our UL label. There will be a several model numbers listed, your model number should have some kind of mark next to it to indicate the exact model you have.

In the case of Filters we will need the exact dimensions of the filter needed. Indicate which side has the pull tabs on it. Filters are not a warranty replacement part. With care your filters should last many years.

SERVICE:

When calling in for Service we need the following information:

- **Model Number (not serial number)**
- **Proof of Purchase**
- **Name of company you purchased the hood through.**
- **Name & Phone number of the person to contact to set up the service call.**
- **Full address of the location where service is to be done.**

Warranty: 1900D—Seven Years, In-Home on manufacturer defects.

Warranty: 1900E / ENV—1 Year Parts ONLY!

Maintenance & Warranty Information

This product has the simplest of cleaning requirements. To remove Baffle Filters, remove center panel by pulling panel toward the front of the hood, lift up to remove. Move filters to the center of the hood, pull baffle towards the front of the hood and lift out. To remove grease tray, slide tray to the top of the hood and lift out. Clean filters often for the best performance. How often depends on amount and type of cooking. When cleaning a painted hood, wash it with mild, soapy water ONLY! Wipe the hood thoroughly with clean water and dry with soft cloth. When cleaning Stainless Steel use a cleaner specifically for Stainless Steel. Always rub with the grain using non-abrasive cleaning materials. AVOID detergents, disinfectants or cleaning products in aerosol cans. **NEVER** use abrasive scouring powders on your hood! Some cleaning chemicals may damage the hood finish!

- **Recessed** (Behind grease filters): Incandescent 40 Watt Bulbs
- ***Bulbs not included on any model.***

Warning: Do not use Halogen bulbs in sockets not intended for their use!

Your Imperial Warranty: Proof of original purchase date is needed to obtain service under warranty.

1900D—Seven Year Limited Warranty, Parts and Labor.

For seven years from date of original purchase, we will provide parts and service labor in your home to repair or replace any part of the hood that fails due to a manufacturing defect. Call for service at (800) 851-4192

1900E / ENV—1 Year Parts ONLY

ITEMS NOT COVERED UNDER THE 7 YEAR WARRANTY

1. Service calls to correct the installation of your appliance, to instruct you how to use your appliance, to replace or repair house fuses or the correct housing wiring or plumbing.
2. Service calls to repair or replace appliance light bulbs or filters.
3. Repairs when your appliance is used for other than normal, single-family household use.
4. Damage resulting from accident, alteration, misuse, abuse, fire, flood, acts of God, improper installation, installation not in accordance with electrical or plumbing codes.
5. Replacement parts or repair costs for units operated outside the United States.
6. Pickup and delivery. This appliance is designed to be repaired in the home.
7. Repairs to parts or systems resulting from unauthorized modification made to the appliance.
8. Expenses for travel and transportation for product service in remote locations.
9. The removal and reinstallation of your appliance if it is installed in an inaccessible location or is not installed in accordance the published installation instructions.
10. Replacement parts or repair labor costs when the appliance is used in a country other than the country in which it was purchased.

SAFETY INSTRUCTIONS

Read and Save These Instructions

Warning: To reduce the risk of fire, electrical shock or injury to persons, observe the following:

A. Use this unit only in the manner intended by the manufacturer. If you have any questions, contact the manufacturer. Before servicing or cleaning unit, switch power off at service panel and lock Service Disconnecting Means to prevent power from being switched on accidentally. When the Service Disconnecting Means cannot be locked, securely fasten a prominent warning device, such as a tag, to the service panel.

Warning: To reduce the risk of a range top grease fire:

A. Never leave surface units unattended at high settings. Boil-Overs cause smoking and greasy spillovers that may ignite. Heat oils slowly on low or medium settings.
B. Always turn hood ON when cooking at high heat or when Flambéing foods (i.e. Crepes Suzette, Cherries Jubilee, Peppercorn Beef Flambé).
C. Clean ventilating fans frequently. Grease should not be allowed to accumulate on fans or filters.
D. Use proper pan size. Always use cookware appropriate for the size of the surface element.

Warning: To reduce the risk of injury to persons in the event of a range top grease fire, observe the following:

A. SMOTHER FLAMES with a close-fitting lid, cookie sheet or metal tray, then turn off the burner. BE CAREFUL TO PREVENT BURNS. If flames do not go out immediately, EVACUATE AND CALL THE FIRE DEPARTMENT.
B. NEVER PICK UP A FLAMING PAN - you may be badly burned.
C. DO NOT USE WATER, including wet dishcloths or towels, violent steam explosion will result.
D. Use an extinguisher ONLY if:
⇒ You know you have a Class ABC extinguisher and you already Know how to use it.
⇒ The fire is small and contained in the area where it started.
⇒ The fire department is being called.
⇒ You can fight the fire with your back to an exit.

Warning: To reduce the risk of fire, electrical shock or injury to persons, observe the following:

A. Installation work and electrical wiring must be done by a qualified person or persons in accordance with all applicable codes and standards, including fire-rated construction.
B. Sufficient air is needed for proper combustion and exhausting of gases through the flue of fuel burning equipment to prevent back drafting. Follow the heating equipment manufacturer's guideline and safety standards such as those published by the National Fire Protection Association (NFPA), and the American society for Heating, Refrigeration & Air conditioning Engineers (ASHRAE), and the local code authorities.
C. When cutting or drilling into a wall or ceiling, do not damage electrical wiring and other hidden utilities.
D. Ducted fans must always be vented to the outdoors.

Warning: To reduce risk of fire, use only Smooth Metal Ducting!